orbita

Smart Hotel & Smart Home

Professional & Innovative

Professional | Innovative

www.orbitatech.com / www.orbitalock.com

QSmart Souq W.L.L

Mobile: +974 7788-1342
Office : +974 4409 5447
Email : sales@qsmartsouq.qa

P.O. Box 39492
Office No. 21, 1st Floor
Sharq Capital Business Center,
Building No. 311
C Ring Road, Doha Qatar.

www.qsmartsouq.qa

Professional

Innovative

CONTENTS

01 Company Profile ---------- Page 01
02 Company Development ---------- Page 03
03 Certificate ---------- Page 05
04 Hotel Lock ---------- Page 07
05 Smart Fingerprint Lock ---------- Page 35
06 Bathroom Lock ---------- Page 45
07 Locker Lock ---------- Page 46
08 Smart Hotel System ---------- Page 47
09 Hotel Room Safe ---------- Page 49
10 Hotel Minibar ---------- Page 50
11 Smart Hotel & Smart Home Switch ---------- Page 51
12 Energy Saving Switch ---------- Page 53
13 Door Plate ---------- Page 54
14 Lift Reader ---------- Page 55
15 Hotel Lock Accessories ---------- Page 56
16 Hotel Telephone ---------- Page 57
17 Reference ---------- Page 58

Company Profile

Orbita is a reputable hospitality products manufacturer with ISO certified 46,000 square meters garden factory, established to offer the best quality products with professional and effective service to our customers.

Orbita series of products including hotel card locking system, hotel in room safe , hotel minibar, touch screen switch, hotel in room telephone, locker lock, smart hotel,smart lock,smart room and other hotel in room accessories , are products of years of experience integrated with advanced technologies from Siemens , Dallas, Atmel, Philips etc. Orbita locking system certified by Opera Fidelio and other popular PMS systems, has just enabled Orbita products to a wide range of compatibility.

In fact, all of ORBITA products are CE, FCC, RoHS marked and ORBITA is one of the few brands in this industry that passed 800,000 times BHMA standard circling test. Regional standard like SASO, SONCAP, SIRIM are also available with all Orbita products.

More than 20,000 hotels, service apartments, resorts, university dormitories, hospitals and cruise ships covering 120 countries in the world are using Orbita card locks, digital safes, minibars, touch screen switches and other satisfactory hotel intelligent accessories. Our customers include most popular international hotel management groups such as Marriot, Accor, IHG, Hilton, Hyatt, Wyndham, Kempinski and other regional hotel management groups. Moreover, Orbita is also offering OEM & ODM services for many leading Europen and American brands in this industry.

ORBITA believes that every customer is a customer for life, manufacturing products of fine quality with our experience and knowledge is our source of pride and customer's satisfaction is our only criterion in service.

Production Base

Company Development

2004.11.08
Orbita ShenZhen Established.

2005
Signed strategic cooperation agreement with Al-Muhaidib and entered Middle East market.

2006
Products passed CE,FCC.

2007
Export value exceeded 2 million US dollars.

2008
Adapted ERP to better management.

2009
Product passed En 14846 European standard certification and 200,000 times cycle test.

2010
Factory adapted ISO9001/2008 and established ORBITA Thailand.

2011
ORBITA lock software interfaced with Fidelio Opera PMS system.

2012
Hotel references exceeded 5000 projects,ORBITA became top 3 Chinese brands in international market.

2013
Established ORBITA Vietnam,ORBITA Brazil.

2014
Invested 46000 square-meter garden factory and created the biggest smart lock production capacity in China.

2015
Established Dubai office,Cambodia office.

2016
ORBITA ZigBee wireless hotel lock launched, Entered China domestic market.

2017
Signed agreements with Vienna, Jinjiang Group, Listed as China Hi-Tech Enterprise. GRMS products launched.

2018
BLE,NB-IOT lock and biometric lock launched.

2019
Entered Wyndham /Mehood /GSHM hotel group vendor list.

2020
Established GRMS and Smart home dapartments.

2021
Started R&D on ORBITA Cloud Ecosphere involving ORBITA commercial and residential products.

2022
ORBITA renewed CE certificate for full hotel lock and residential lock series tested by Intertek based on En14846 (mechnical & electronic test) and En1634 (fire test).

CERTIFICATES

Orbita Hotel Locks

Professional

Orbita One Card System Configuration

- Interface with most of the PMS systems including Opera and FIAS format PMS
- Room card operates lift, parking and common access readers
- Room card operates Energy savers to manage power
- Room card operates Sauna, Fitness center locker lock
- Interface with third party readers
- Spare unencrypted sections for third party RFID system

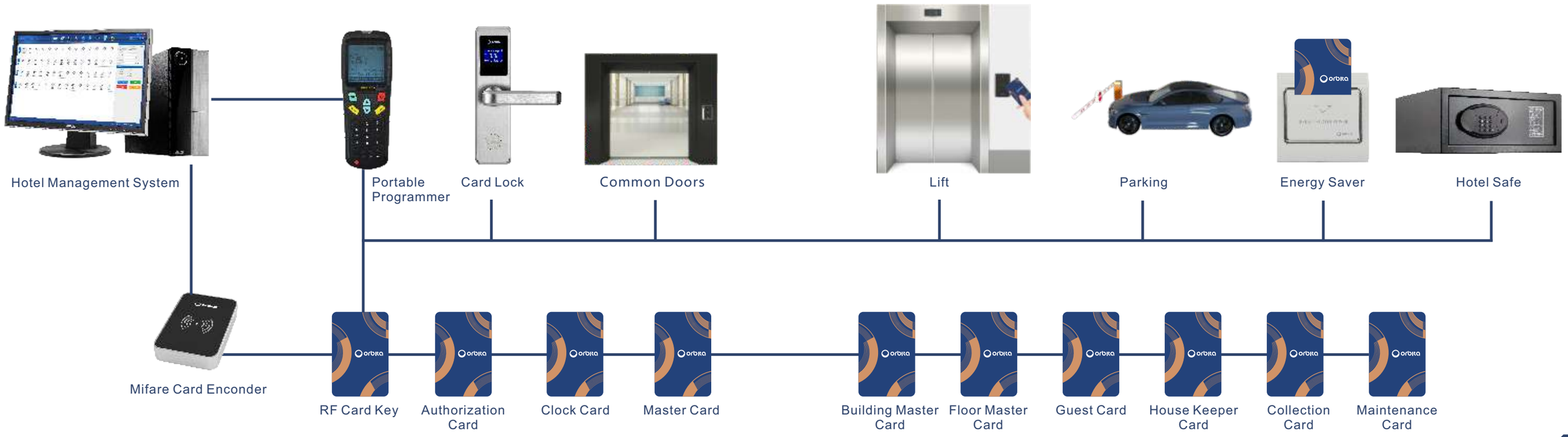

Split Design

Aesthetic Design With Hidden Cylinder

Elegant
&
Fashionable

S3079A S3479A S3179A S3579A

Technical Parameters	
Model	S3079A
Power Consumption	Static Load < 30 μA, Dynamic Load < 200 mA
Working Humidity	20%-90%
Working Temperature	-20℃ ~ 60℃
Dimension of External Panel	L60 * W60 * H12 mm

Specifications

- Support the latest RFID &NFC technology with Mifare 13.56MHz technology
- Optional Bluetooth & Wireless Online solution
- UL fire rated mortise
- Moisture & dust proof
- BHMA (circling test) listed ANSI mortise
- Panic release function
- 304 stainless steel corrosion resistant handle and panels
- Hidden mechanical override cylinder
- Standard 1680 events, optional 3360 events
- Interface with Opera or FIAS format PMS
- Operated with 4 standard AA alkaline batteries lasting 12~24 months
- Low battery voltage warning
- Wireless Portable Programmer
- Room card compatible with hotel lift reader & common access reader for Parking / Swimming Pool/ Sauna Room/ Tennis Court/ Gym etc.

Lock Mortise

Unit:mm

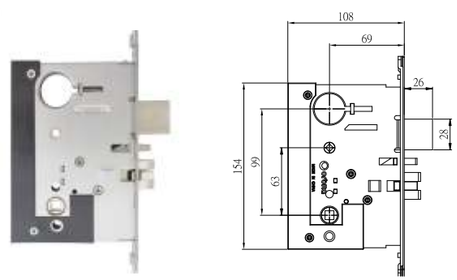

Lock Size

Unit:mm

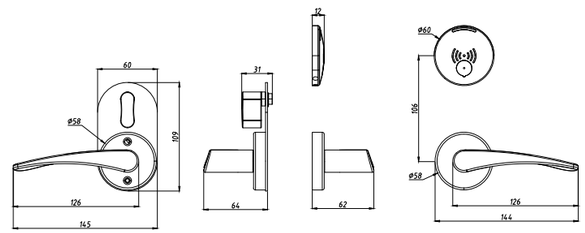

Ultra-thin Design

FASHION

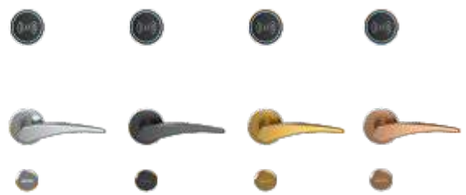

S3074 S3474 S3174 S3574

Technical Parameters

Model	S3074
Power Consumption	Static Load < 30 μA, Dynamic Load < 200 mA
Working Humidity	20%-90%
Working Temperature	-20℃ ~ 60℃
Dimension of External Panel	L52 * W52 * H12 mm

Specifications

- Support the latest RFID &NFC technology with Mifare 13.56MHz technology
- Optional Bluetooth & Wireless Online solution
- UL fire rated mortise
- Moisture & dust proof
- BHMA (circling test) listed ANSI mortise
- Panic release function
- 304 stainless steel corrosion resistant handle and panels
- Hidden mechanical override cylinder
- Standard 1680 events, optional 3360 events
- Interface with Opera or FIAS format PMS
- Operated with 4 standard AA alkaline batteries lasting 12~24 months
- Low battery voltage warning
- Wireless Portable Programmer
- Room card compatible with hotel lift reader & common access reader for Parking / Swimming Pool/ Sauna Room/ Tennis Court/ Gym etc.

Lock Mortise

Unit:mm

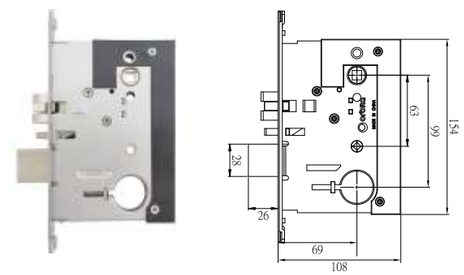

Lock Size

Unit:mm

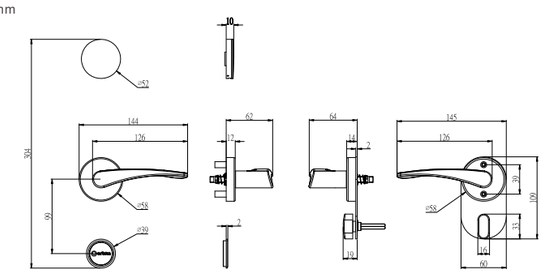

Elegant & Fashionable

Aesthetic design with hidden cylinder

S3078 S3478 S3178 S3578

Technical Parameters

Model	S3078
Power Consumption	Static Load < 30 μA, Dynamic Load < 200 mA
Working Humidity	20%-90%
Working Temperature	-20℃ ~ 60℃
Dimension of External Panel	L125 * W61 * H22 mm

Specifications

- Support the latest RFID &NFC technology with Mifare 13.56MHz technology
- Optional Bluetooth & Wireless Online solution
- UL fire rated mortise
- Moisture & dust proof
- BHMA (circling test) listed ANSI mortise
- Panic release function
- 304 stainless steel corrosion resistant handle and panels
- Hidden mechanical override cylinder
- Standard 1680 events, optional 3360 events
- Interface with Opera or FIAS format PMS
- Operated with 4 standard AA alkaline batteries lasting 12~24 months
- Low battery voltage warning
- Wireless Portable Programmer
- Room card compatible with hotel lift reader & common access reader for Parking / Swimming Pool/ Sauna Room/ Tennis Court/ Gym etc.

Lock Mortise

Unit:mm

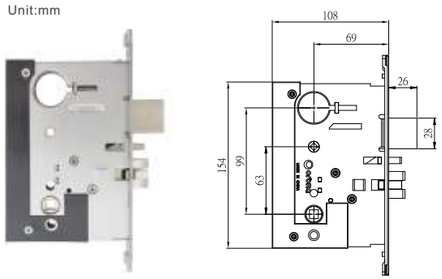

Lock Size

Unit:mm

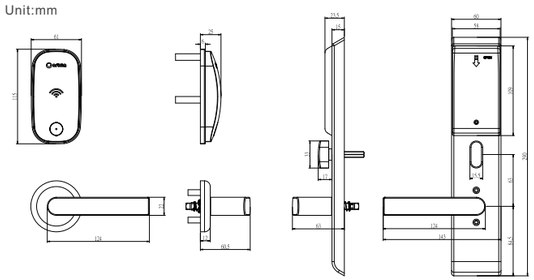

Fashionable & Unique

Sliding panel with hidden cylinder

S3072H S3472H S3172H S3572H

Technical Parameters	
Model	S3072H
Power Consumption	Static Load < 30 μA, Dynamic Load < 200 mA
Working Humidity	20%-90%
Working Temperature	-20℃ ~ 60℃
Dimension of External Panel	L95 * W62 * H26.8 mm

Specifications

- Support the latest RFID &NFC technology with Mifare 13.56MHz technology
- Optional Bluetooth & Wireless Online solution
- UL fire rated mortise
- Moisture & dust proof
- BHMA (circling test) listed ANSI mortise
- Panic release function
- 304 stainless steel corrosion resistant handle and panels
- Hidden mechanical override cylinder
- Standard 1680 events, optional 3360 events
- Interface with Opera or FIAS format PMS
- Operated with 4 standard AA alkaline batteries lasting 12~24 months
- Low battery voltage warning
- Wireless Portable Programmer
- Room card compatible with hotel lift reader & common access reader for Parking / Swimming Pool/ Sauna Room/ Tennis Court/ Gym etc.

Lock Mortise

Unit:mm

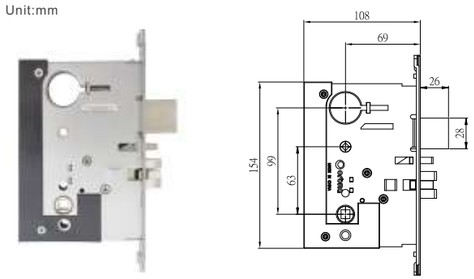

Lock Size

Unit:mm

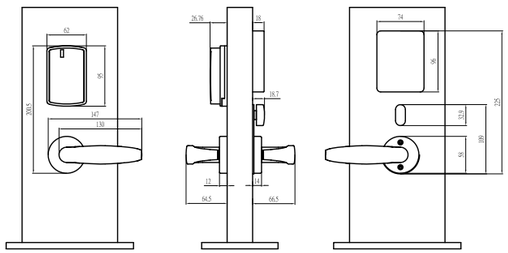

Slim Design
European Style

Best choice for narrow profile
or aluminum door

E3064P E3464P E3164P E3564P

Technical Parameters

Model	E3064P
Power Consumption	Static Load < 30 μA, Dynamic Load < 200 mA
Working Humidity	20%-90%
Working Temperature	-20℃ ~ 60℃
Dimension of External Panel	L280 * W40 * H13 mm

Specifications

- Support the latest RFID &NFC technology with Mifare 13.56MHz technology
- Optional Bluetooth & Wireless Online solution
- Renovated clutch inside lock panel
- Fire rated(CE,SIRIM) purely mechanical mortise with flexible width
- Moisture & dust proof
- 304 stainless steel corrosion resistant handle and panels
- Hidden mechanical override cylinder
- Standard 1680 events, optional 3360 events
- Interface with Opera or FIAS format PMS
- Operated with 4 standard AAA alkaline batteries lasting 12~24 months
- Low battery voltage warning
- Wireless Portable Programmer
- Room card compatible with hotel lift reader & common access reader for Parking / Swimming Pool/ Sauna Room/ Tennis Court/ Gym etc.

Lock Mortise (Other Eu Mortise Size Available)

Unit:mm

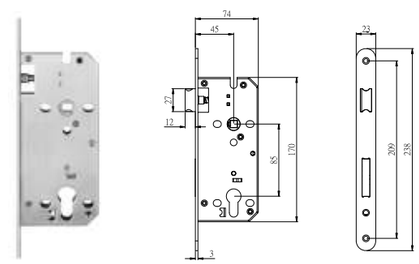

Lock Size

Unit:mm

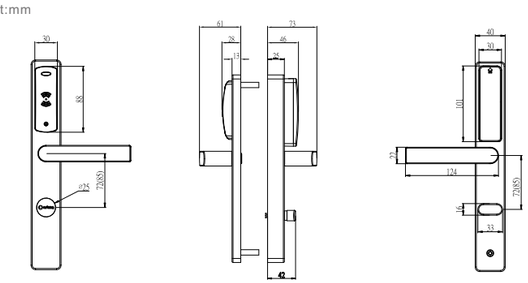

S3063P S3463P S3163P S3563P

Technical Parameters

Model	S3063P
Power Consumption	Static Load < 30 μA, Dynamic Load < 200 mA
Working Humidity	20%-90%
Working Temperature	-20℃ ~ 60℃
Dimension of External Panel	L94 * W36 * H20 mm

Specifications

- Support the latest RFID &NFC technology with Mifare 13.56MHz technology
- Optional Bluetooth & Wireless Online solution
- Renovated clutch inside lock panel
- Fire rated(CE,SIRIM) purely mechanical mortise with flexible width
- Moisture & dust proof
- 304 stainless steel corrosion resistant handle and panels
- Hidden mechanical override cylinder
- Standard 1680 events, optional 3360 events
- Interface with Opera or FIAS format PMS
- Operated with 4 standard AAA alkaline batteries lasting 12~24 months
- Low battery voltage warning
- Wireless Portable Programmer
- Room card compatible with hotel lift reader & common access reader for Parking / Swimming Pool/ Sauna Room/ Tennis Court/ Gym etc.

Lock Mortise (Other Eu Mortise Size Available)

Unit:mm

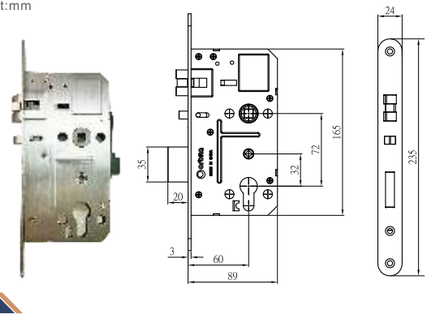

Lock Size

Unit:mm

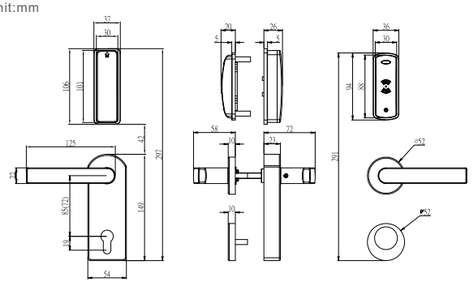

S4032 S4432 S4132 S4532

Technical Parameters

Model	S4032
Power Consumption	Static Load < 30 μA, Dynamic Load < 200 mA
Working Humidity	20%-90%
Working Temperature	-20℃ ~ 60℃
Dimension of External Panel	L100 * W65 * H15 mm

Specifications

- Support the latest RFID &NFC technology with Mifare 13.56MHz technology
- Optional Bluetooth & Wireless Online solution
- Fire rated (CE, SIRIM) European electronic anti-panic mortise
- Moisture & dust proof
- 304 stainless steel corrosion resistant handle and panels
- Free Turn anti-violence handle
- Hidden mechanical override cylinder
- Standard 1680 events, optional 3360 events
- Interface with Opera or FIAS format PMS
- Operated with 4 standard AA alkaline batteries lasting 12~24 months
- Low battery voltage warning
- Wireless Portable Programmer
- Room card compatible with hotel lift reader & common access reader for Parking / Swimming Pool/ Sauna Room/ Tennis Court/ Gym etc.

Lock Mortise (Other Eu Mortise Size Available)

Unit:mm

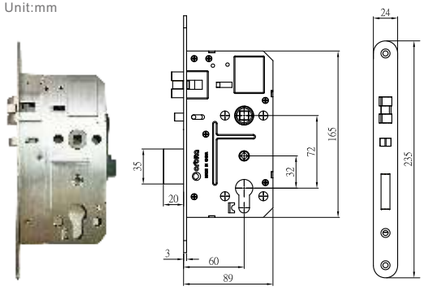

Lock Size

Unit:mm

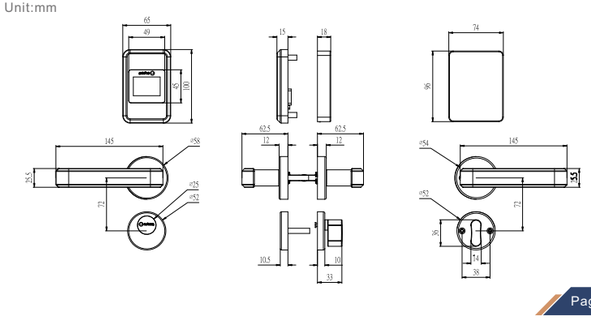

LCD Hotel Lock

A real user friendly lock with room confirmation
and text / symbol indication

E4031 E4431 E4131 E4531

Technical Parameters

Model	E4031
Power Consumption	Static Load < 30 μA, Dynamic Load < 200 mA
Working Humidity	20%-90%
Working Temperature	-20℃ ~ 60℃
Dimension of External Panel	L290 * W60 * H15 mm

Specifications

- Support the latest RFID &NFC technology with Mifare 13.56MHz technology
- Optional Bluetooth & Wireless Online solution
- Fire rated(CE, SIRIM), optional UL fire rated mortise
- Moisture & dust proof
- BHMA (circling test) listed ANSI mortise
- Panic release function
- 304 stainless steel corrosion resistant handle and panels
- Free Turn anti-violence handle
- Hidden mechanical override cylinder
- Standard 1680 events, optional 3360 events
- Interface with Opera or FIAS format PMS
- Operated with 4 standard AA alkaline batteries lasting 12~24 months
- Low battery voltage warning
- Wireless Portable Programmer
- LCD screen showing: Welcome, Room number, Weekday, Battery status, Wrong operation indication etc
- Room card compatible with hotel lift reader & common access reader for Parking / Swimming Pool/ Sauna Room/ Tennis Court/ Gym etc.

Lock Mortise

Unit:mm

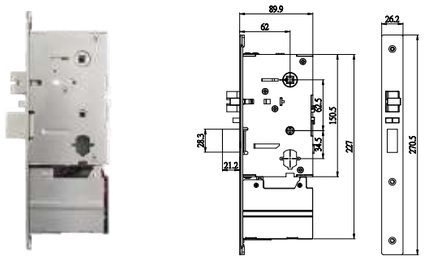

Lock Size

Unit:mm

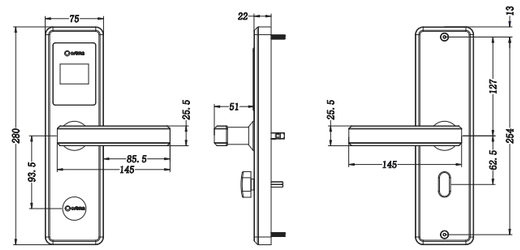

LCD Hotel Lock

A real user friendly and fashionable lock with room confirmation and text / symbol indication

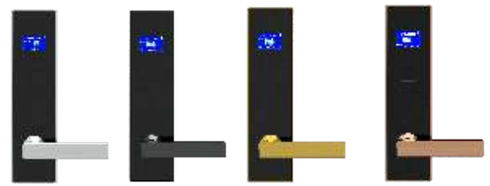

E4041 E4441 E4141 E4541

Technical Parameters

Model	E4041
Power Consumption	Static Load < 30 μA, Dynamic Load < 200 mA
Working Humidity	20%-90%
Working Temperature	-20℃ ~ 60℃
Dimension of External Panel	L280 * W75 * H22 mm

Specifications

- Support the latest RFID &NFC technology with Mifare 13.56MHz technology
- Optional Bluetooth & Wireless Online solution
- Fire rated(CE, SIRIM), optional UL fire rated mortise
- Moisture & dust proof
- BHMA (circling test) listed ANSI mortise
- Panic release function
- 304 stainless steel corrosion resistant handle and frame with acrylic panels fashion design
- Free Turn anti-violence handle
- Hidden mechanical override cylinder
- Standard 1680 events, optional 3360 events
- Interface with Opera or FIAS format PMS
- Operated with 4 standard AA alkaline batteries lasting 12~24 months
- Low battery voltage warning
- Wireless Portable Programmer
- LCD screen showing: Welcome, Room number, Weekday, Battery status, Wrong operation indication etc
- Room card compatible with hotel lift reader & common access reader for Parking / Swimming Pool/ Sauna Room/ Tennis Court/ Gym etc.

Lock Mortise

Unit:mm

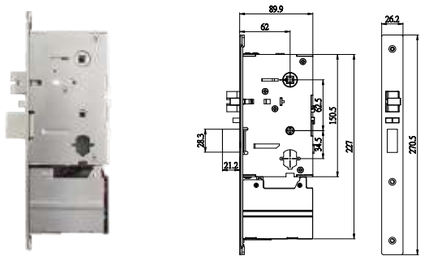

Lock Size

Unit:mm

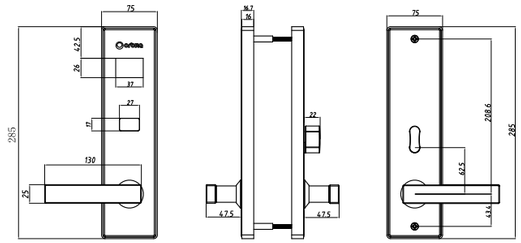

Waterproof Design

Complete 304 stainless steel material
Sealed electronics

E3041 E3441 E3141 E3541

Technical Parameters	
Model	E3041
Power Consumption	Static Load < 30 μA, Dynamic Load < 200 mA
Working Humidity	20%-90%
Working Temperature	-20℃ ~ 60℃
Dimension of External Panel	L280 * W75 * H22 mm

Specifications

- Support the latest RFID &NFC technology with Mifare 13.56MHz technology
- Optional Bluetooth & Wireless Online solution
- Fire rated(CE, SIRIM), optional UL fire rated mortise
- Water & dust proof with IP54 certificate
- BHMA (circling test) listed ANSI mortise
- Panic release function
- 304 stainless steel corrosion resistant handle and panels
- Free Turn anti-violence handle
- Hidden mechanical override cylinder
- Standard 1680 events, optional 3360 events
- Interface with Opera or FIAS format PMS
- Operated with 4 standard AA alkaline batteries lasting 12~24 months
- Low battery voltage warning
- Wireless Portable Programmer
- Room card compatible with hotel lift reader & common access reader for Parking / Swimming Pool/ Sauna Room/ Tennis Court/ Gym etc.

Lock Mortise

Unit:mm

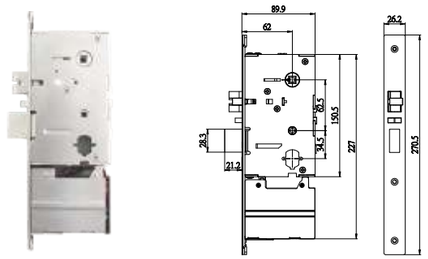

Lock Size

Unit:mm

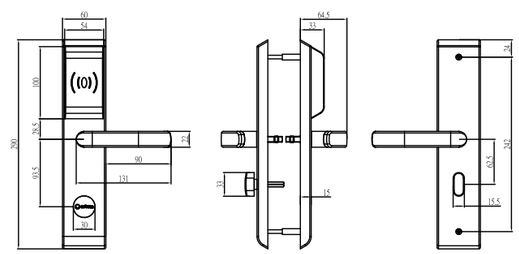

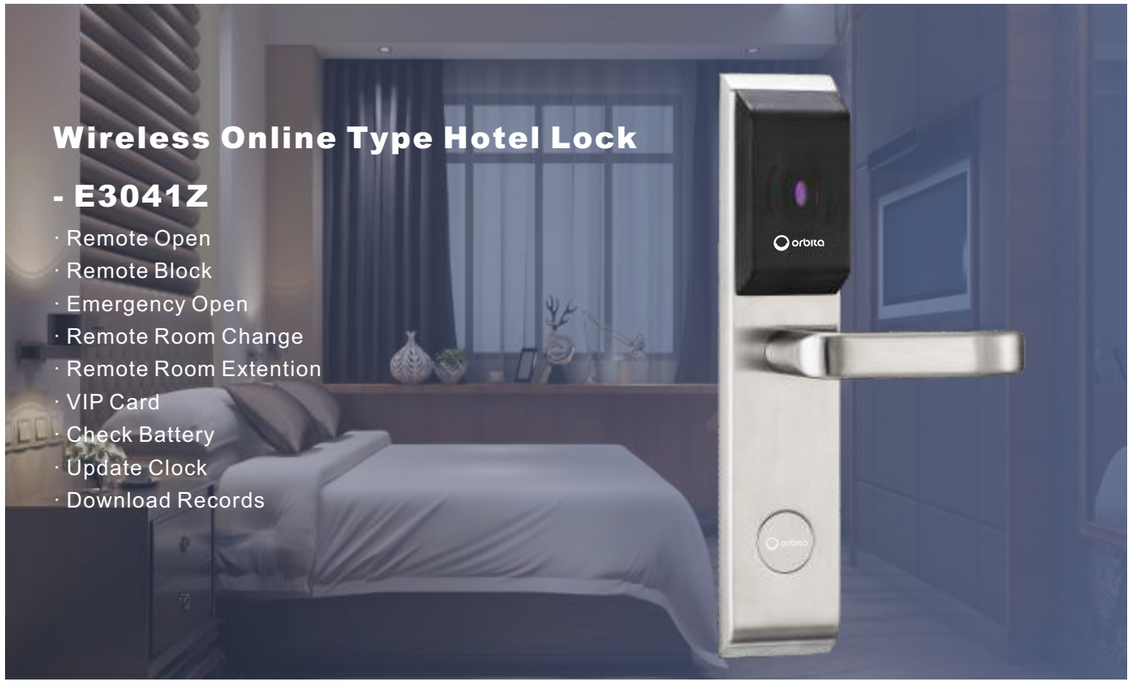

Hotel Mobile Key Application

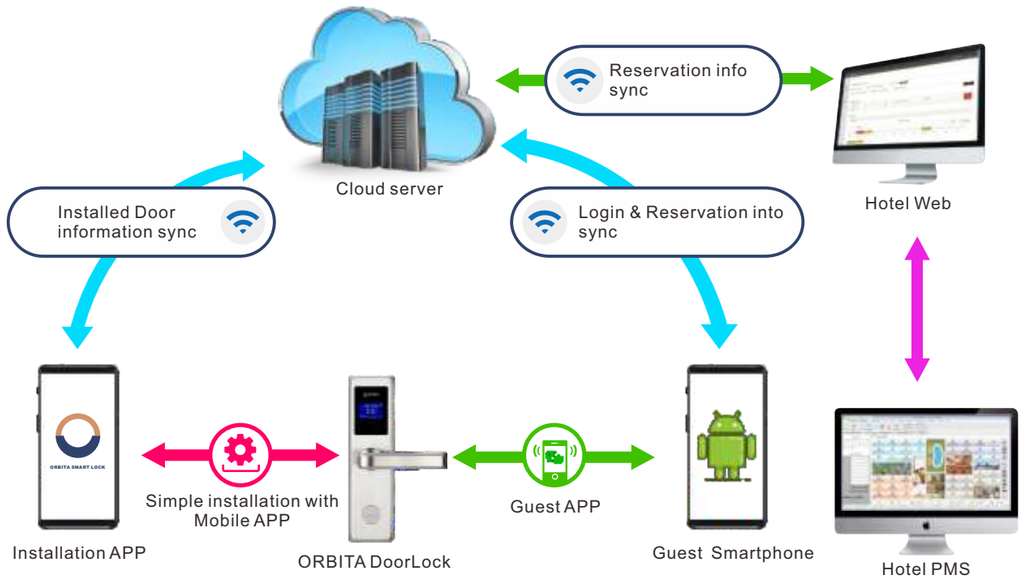

Hotel Wireless Online Lock & Door Plate Application

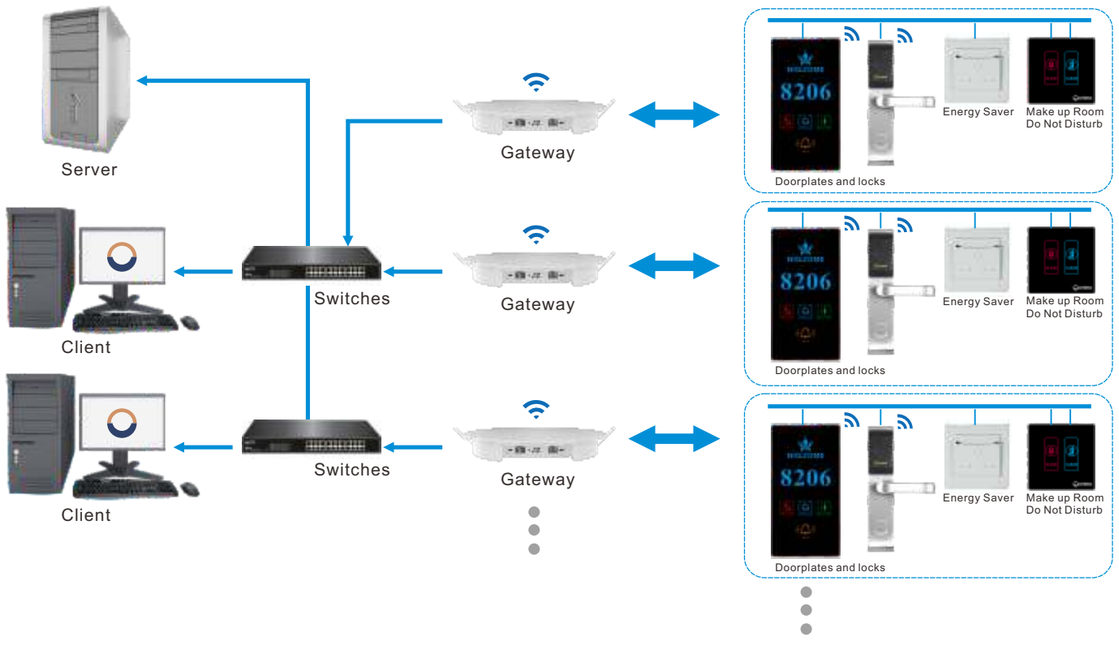

Features

- Open methods: code, RFID card, Mobile key, override mechanical key
- System Generated password with validity
- Mobile Key with validity
- Optional on-line function with gateway
- Application: AirBnb, motel, family hotel, rental apartment, service apartment, office etc.

◆ Size (mm)

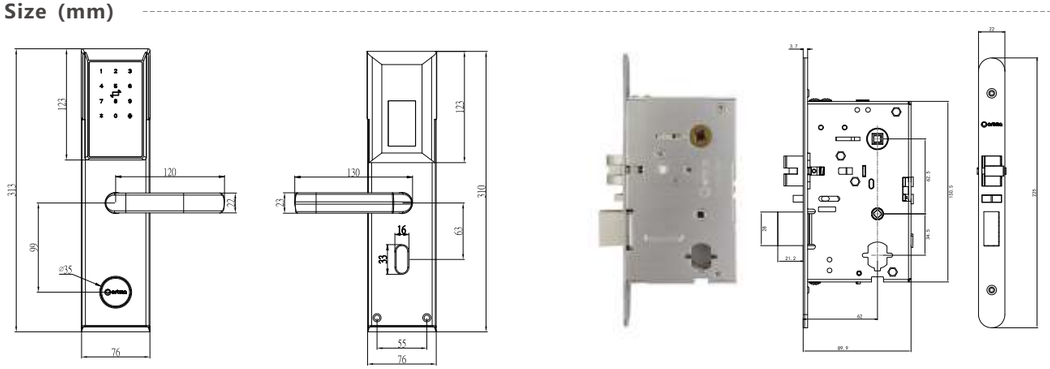

Model:E3093	Material: 304 Stainless Steel
Color: Silver, Golden, Antique Bronze, Black	Battery: 4 AA Alkaline
Operating Temperature :< -20°C~60°C	Operating Humidity: < 80%
Mortise: Precision Casting 304 Stainless Steel, With Security Latch	
Door type: Wooden door, Security door, Copper door, Stainless steel door etc	
Door thickness: 40-110mm	

ORBITA Cloud Ecosphere

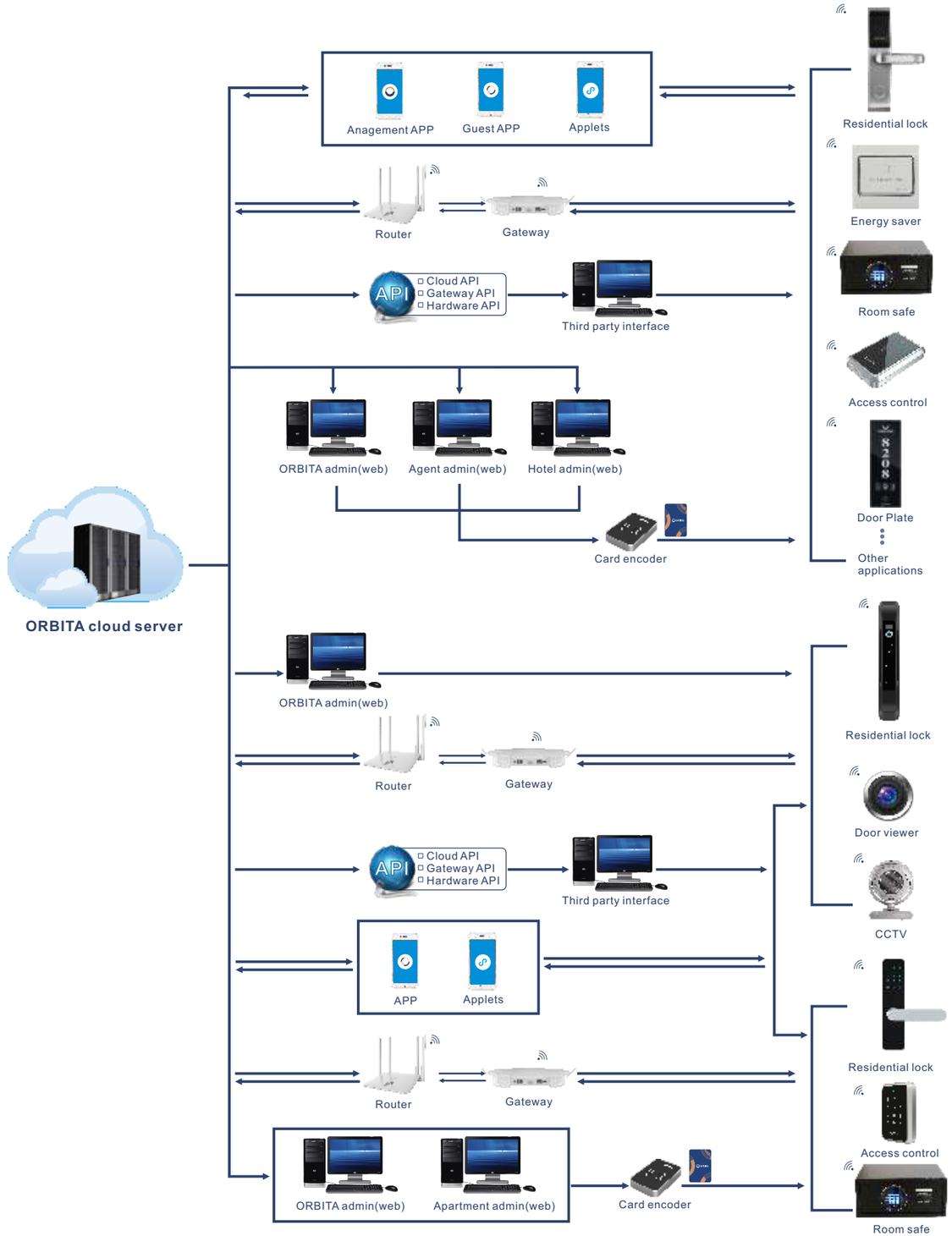

Mortise

(Unit:mm)

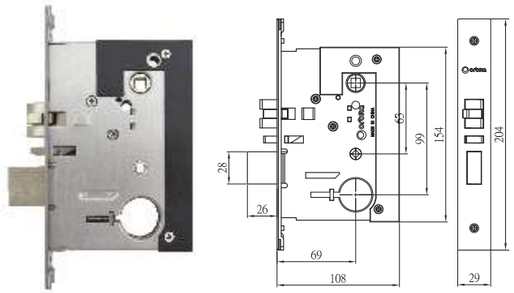

Model:M01

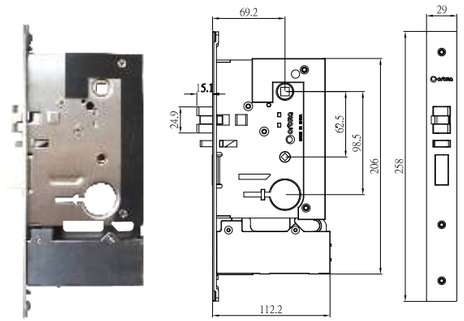

Model:M06

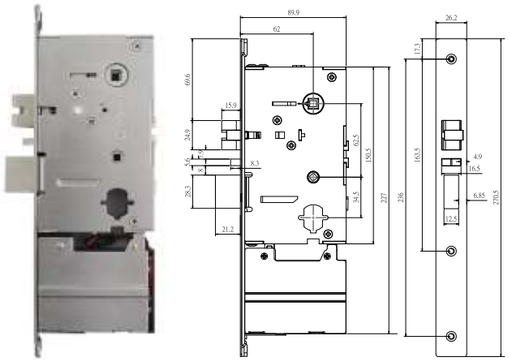

Model:M10

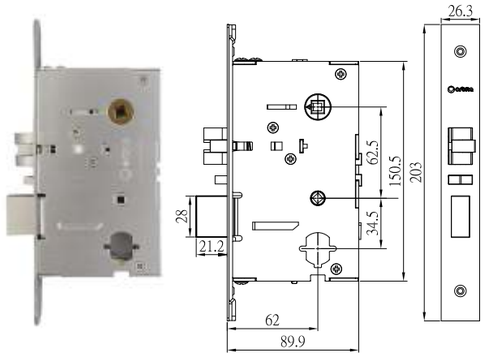

Model:M11

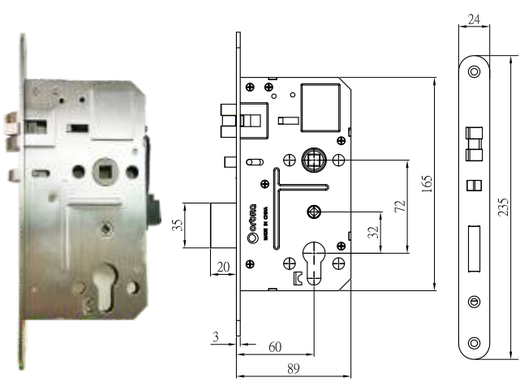

Model:M07

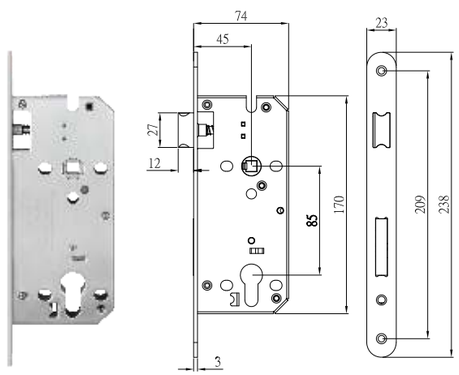

Model:M08

Precision casting 304 stainless steel

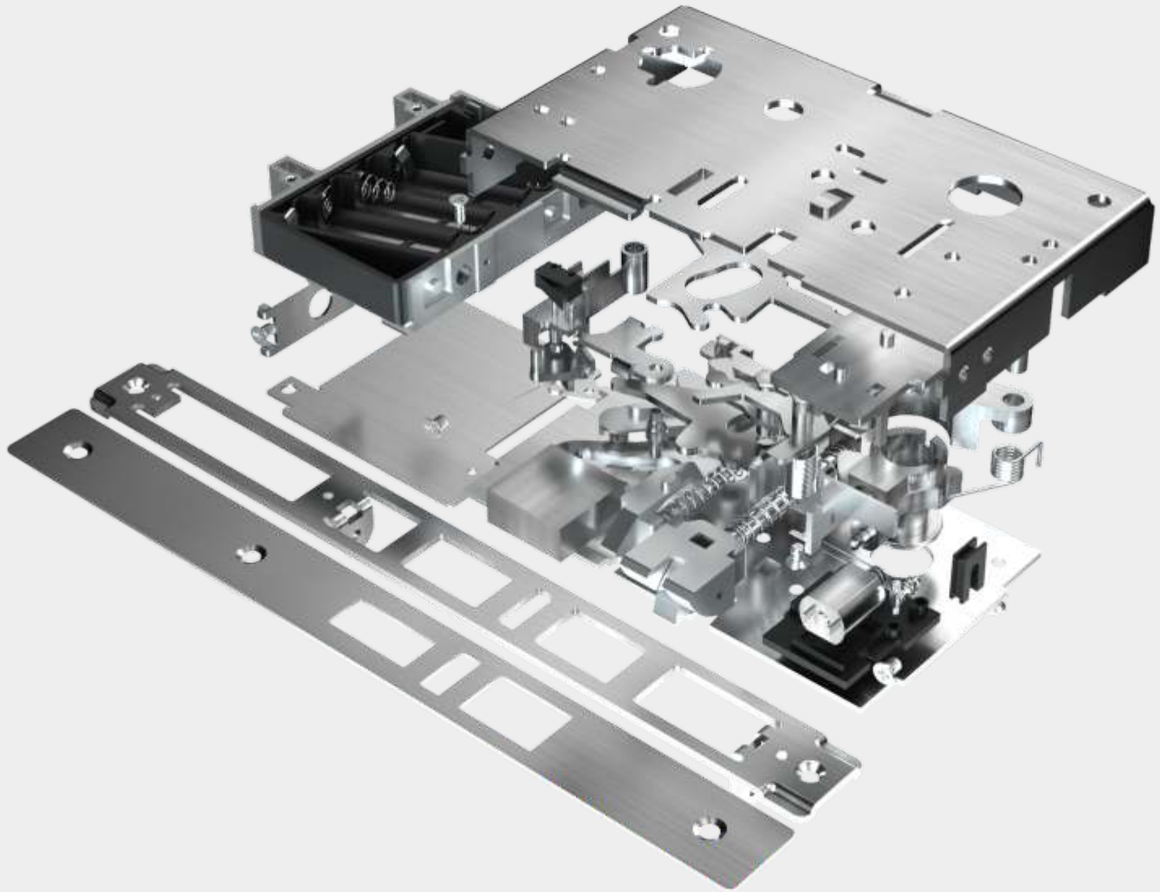

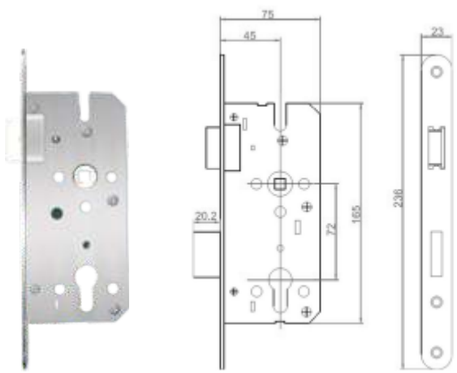

Model:M09

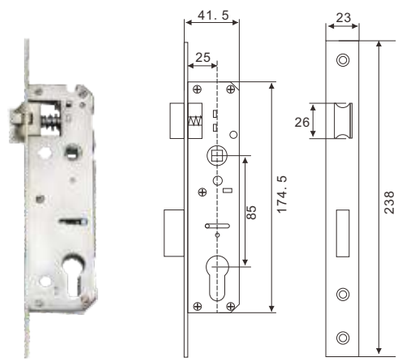

Model:M00

ORBITA Smart Fingerprint Lock

Safe & Convenient

ORBITA P8010 Smart Lock

Safe & Simple

Multiple unlocking methods

ORBITA P8030 Automatic Smart Lock

Safe & Convenient

Multiple unlocking methods

Features

- Unlocking methods: Fingerprint, RFID Card, Password, App, Applets, Override mechanical key
- 6-16-digital anti-peeping password
- Sweden FPC biometric fingerprint sensor
- Voice navigation
- LCD display for text navigation
- Tamper-proof alarm, low battery alarm, continuous wrong password alarm
- Mini USB port for emergency power supply by power bank
- Traceable events

◆ Size (mm)

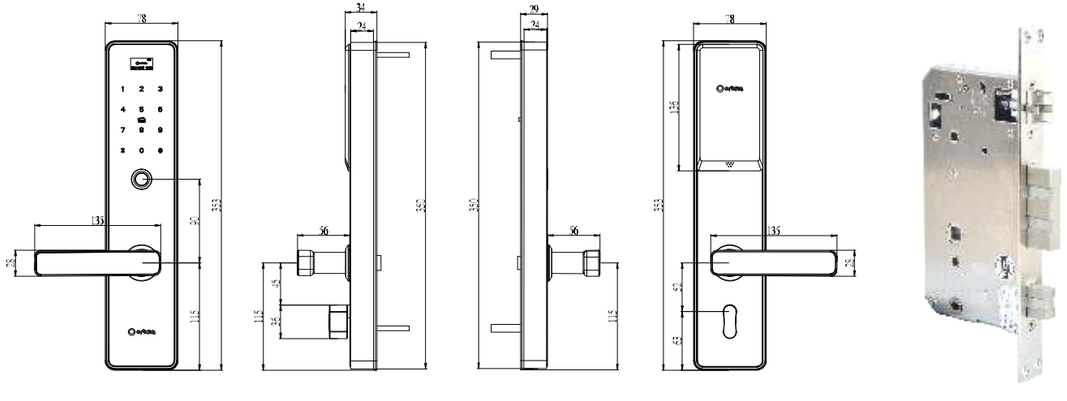

Model: P8010	Material: 304 Stainless Steel
Color: Silver, Golden, Antique Bronze, Black	Battery: 4 AA Alkaline
Operating Temperature : -20°C~60°C	Operating Humidity: < 80%
Mortise: Precision Casting 304 Stainless Steel, With Security Latch	
Door type: Wooden door, Security door, Copper door, Stainless steel door etc	
Door thickness: 40-110mm	

Features

- Unlocking methods: Fingerprint, RFID Card, Password, App, Applets, Override mechanical key
- Motorized latch and deadbolt
- 6-16-digital anti-peeping password
- Electronic door bell with App indication and remote unlocking
- Sweden FPC biometric fingerprint sensor
- Voice navigation
- LCD display for text navigation
- Tamper-proof alarm, low battery alarm, continuous wrong password alarm
- Powered by rechargeable battery
- Mini USB port for emergency power supply by power bank
- Traceable events

◆ Size (mm)

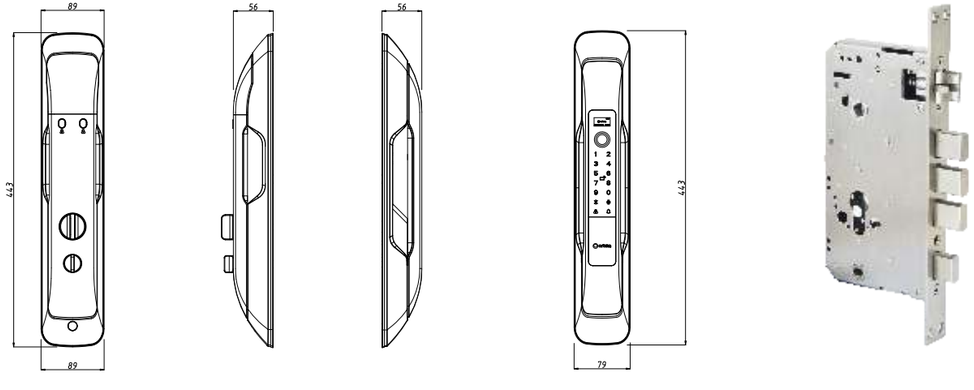

Model: P8030	Material: High Strength Zinc Alloy
Color: Silver, Golden, Antique Bronze, Black	Battery: Rechargeable lithium battery
Operating Temperature : -20°C~60°C	Operating Humidity: < 80%
Mortise: Precision Casting 304 Stainless Steel, With Security Latch	
Door type: Wooden door, Security door, Copper door, Stainless steel door etc	
Door thickness: 40-110mm	

ORBITA P7020 Bluetooth Smart Lock

Remote one time password generation

Multiple unlocking methods

Features

- Unlocking methods: Fingerprint, Card, Password, Bluetooth, override mechanical key
- 6-16-digital anti-peeping password
- Sweden FPC biometric fingerprint sensor
- Tamper-proof alarm, low battery alarm, continuous wrong password alarm
- Events traceable by mobile App
- Application: Airbnb, studio, rental apartment, School, Office

◆ Size (mm)

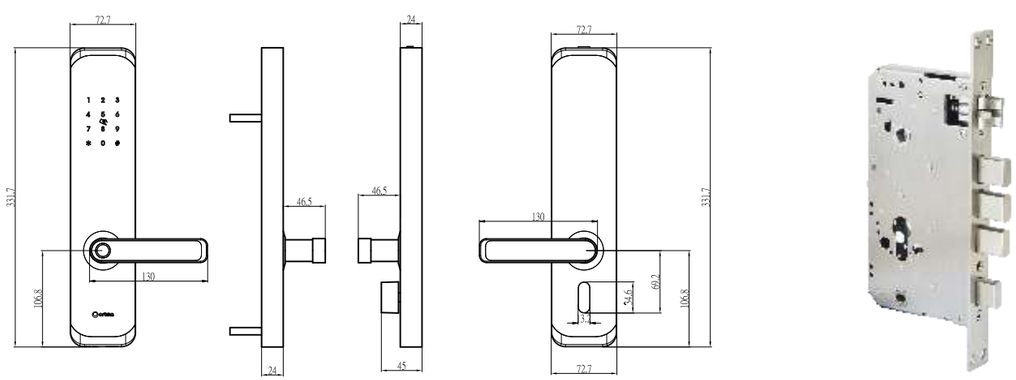

Model: P7020	Material: High Strength Aluminum Alloy
Color: Silver, Black	Battery: 4 AA Alkaline
Operating Temperature : -20°C~60°C	Operating Humidity: < 80%
Mortise: Precision Casting 304 Stainless Steel, With Security Latch	
Door type: Wooden door, Security door, Copper door, Stainless steel door etc	
Door thickness: 40-110mm	

ORBITA P7021 Bluetooth Smart Lock

SAFE & CONVENIENT

Multiple unlocking methods

Features

- Unlocking methods: Fingerprint, Card, Password, Bluetooth, override mechanical key
- 6-16-digital anti-peeping password
- Sweden FPC biometric fingerprint sensor
- Tamper-proof alarm, low battery alarm, continuous wrong password alarm
- Events traceable by mobile App
- Application: Airbnb, studio, rental apartment, School, Office

◆ Size (mm)

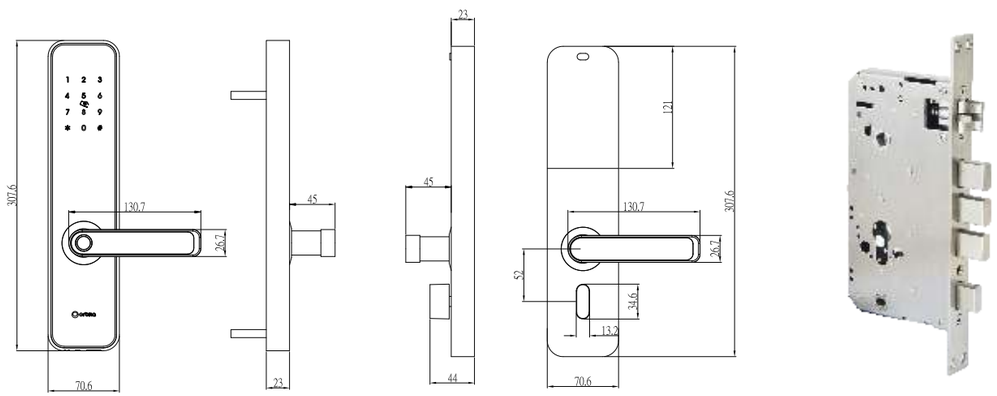

Model: P7021	Material: High Strength Aluminum Alloy
Color: Silver, Black	Battery: 4 AA Alkaline
Operating Temperature : -20°C~60°C	Operating Humidity: < 80%
Mortise: Precision Casting 304 Stainless Steel, With Security Latch	
Door type: Wooden door, Security door, Copper door, Stainless steel door etc	
Door thickness: 40-110mm	

ORBITA P7024 Bluetooth Smart Lock

Remote one time password generation

Multiple unlocking methods

ORBITA P7025 Automatic Bluetooth Smart Lock

Simple & Economical

Multiple unlocking methods

Features

- Unlocking methods:Fingerprint, RFID Card, Password, App
- Motorized latch
- 6-16-digital anti-peeping password
- Sweden FPC biometric fingerprint sensor
- Voice navigation
- Tamper-proof alarm, low battery alarm, continuous wrong password alarm
- Mini USB port for emergency power supply by power bank
- Traceable events

◆ Size (mm)

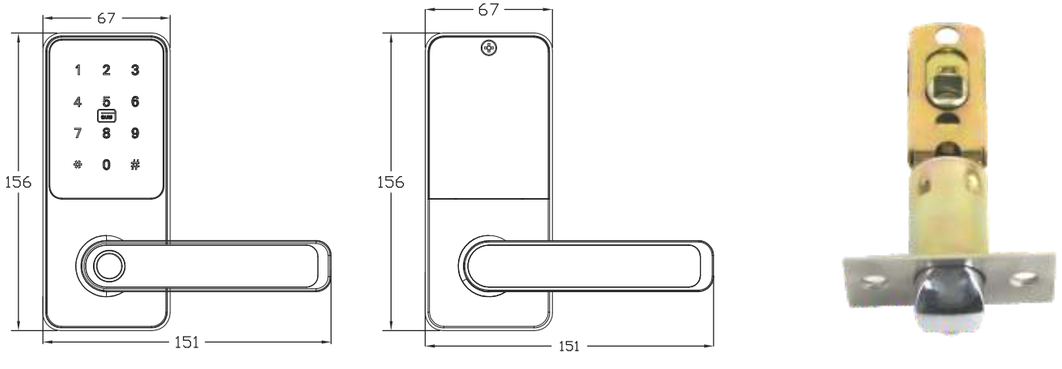

Model: P7024	Material: High quality aluminum alloy
Color: Silver, Black	Battery: 4 AA Alkaline
Operating Temperature : -20°C~60°C	Operating Humidity: < 80%
Mortise: Precision Casting 304 Stainless Steel, With Security Latch	
Door type: Wooden door, Security door, Copper door, Stainless steel door etc	
Door thickness: 40-110mm	

Features

- Unlocking methods:Fingerprint, RFID Card, Password, App
- Motorized latch
- 6-16-digital anti-peeping password
- Sweden FPC biometric fingerprint sensor
- Voice navigation
- Tamper-proof alarm, low battery alarm, continuous wrong password alarm
- Mini USB port for emergency power supply by power bank
- Traceable events

◆ Size (mm)

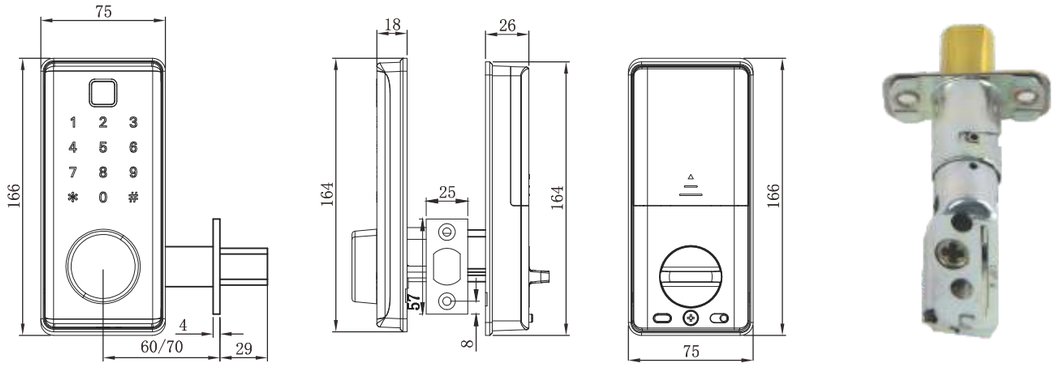

Model: P7025	Material: High quality aluminum alloy
Color: Silver, Black, Champagne gold, Antique Bronze	Battery: 4 AA Alkaline
Operating Temperature : -20°C~60°C	Operating Humidity: < 80%
Mortise: Precision Casting 304 Stainless Steel, With Security Latch	
Door type: Wooden door, Security door, Copper door, Stainless steel door etc	
Door thickness: 40-110mm	

ORBITA P7027 Automatic Smart Lock

Remote one time password generation

Features

- Unlocking methods:Password, App, Bluetooth, Override mechanical key
- 6-16-digital anti-peeping password
- Voice navigation
- low battery alarm, continuous wrong password alarm
- 4pcs AA Alkaline battery
- Mini USB port for emergency power supply by power bank
- Traceable events

◆ Size (mm)

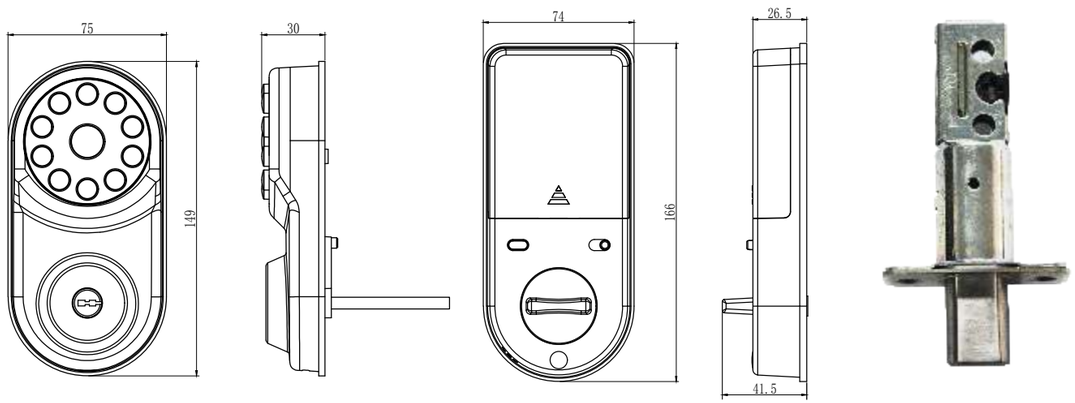

Model: P7027	Material: High Strength Zinc Alloy
Color: Silver, Black	Battery: 4 AA Alkaline
Operating Temperature : -20°C~60°C	Operating Humidity: < 80%
Mortise: Precision Casting 304 Stainless Steel	
Door type: Wooden door, Security door, Copper door, Stainless steel door etc	
Door thickness: 35-55mm	

Orbita Bluetooth Door Lock Application Diagram

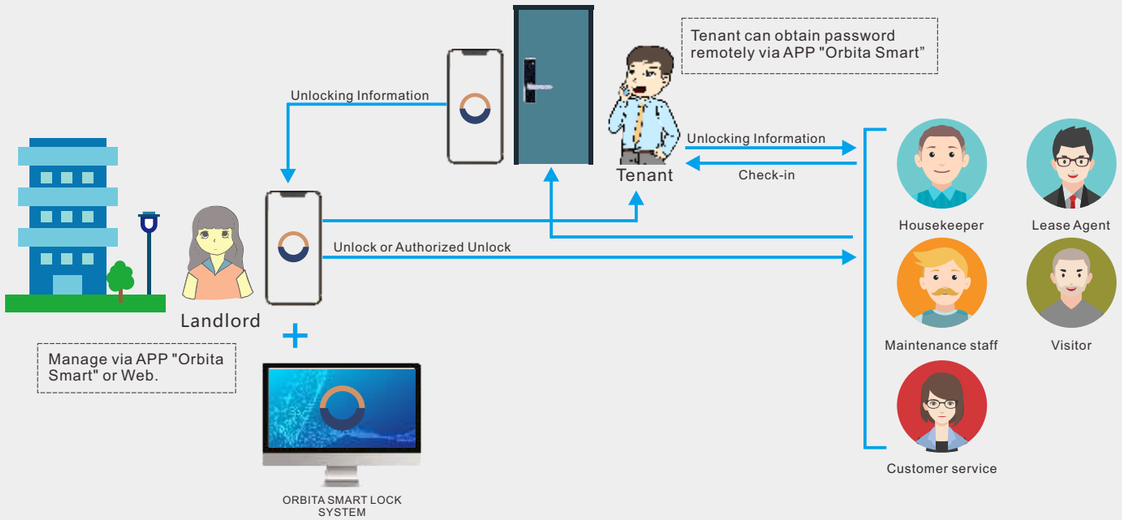

Orbita Bluetooth Door Lock System Communication Diagram

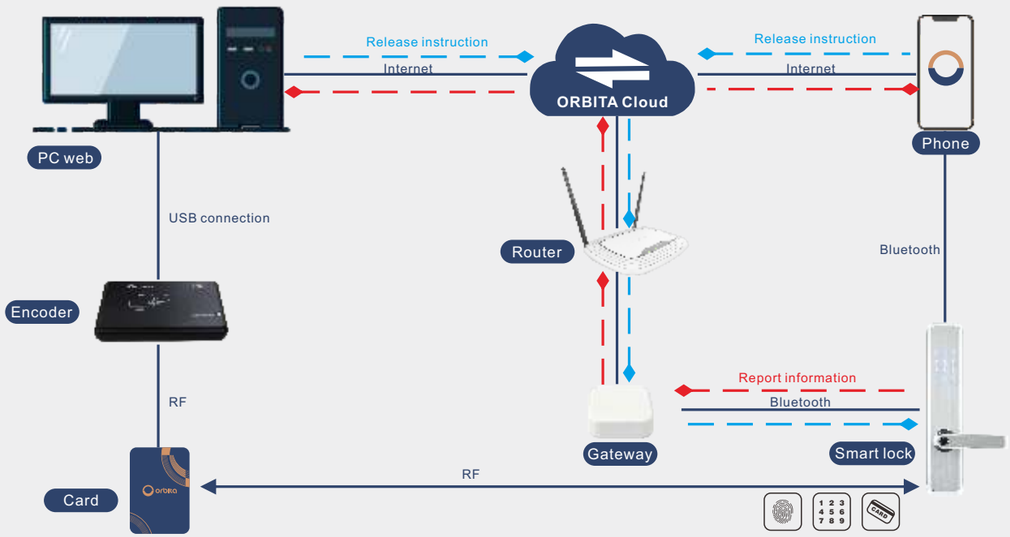

Bathroom Lock

Complete 304 stainless steel material

Locker Lock

Application:

Sauna room, Fitness Center, Spa,Gym, Water Park, Dormitory, Hospital, Soldier Camp etc.

Model:B-304

Model:B-305

Model:B-306

Model:B-403

Model:B-308

1. Standard Mode:

ID or Mifare Card, program permanent guest keys and management keys on lock in advance.

2. Software Mode:

Mifare Card, program guest keys and management keys with validity via software and encoder.

SN-830

SN-840

SN-860

SN-870

SN-880

SN-831

SN-841

SN-861

SN-871

SN-881

Smart Hotel System

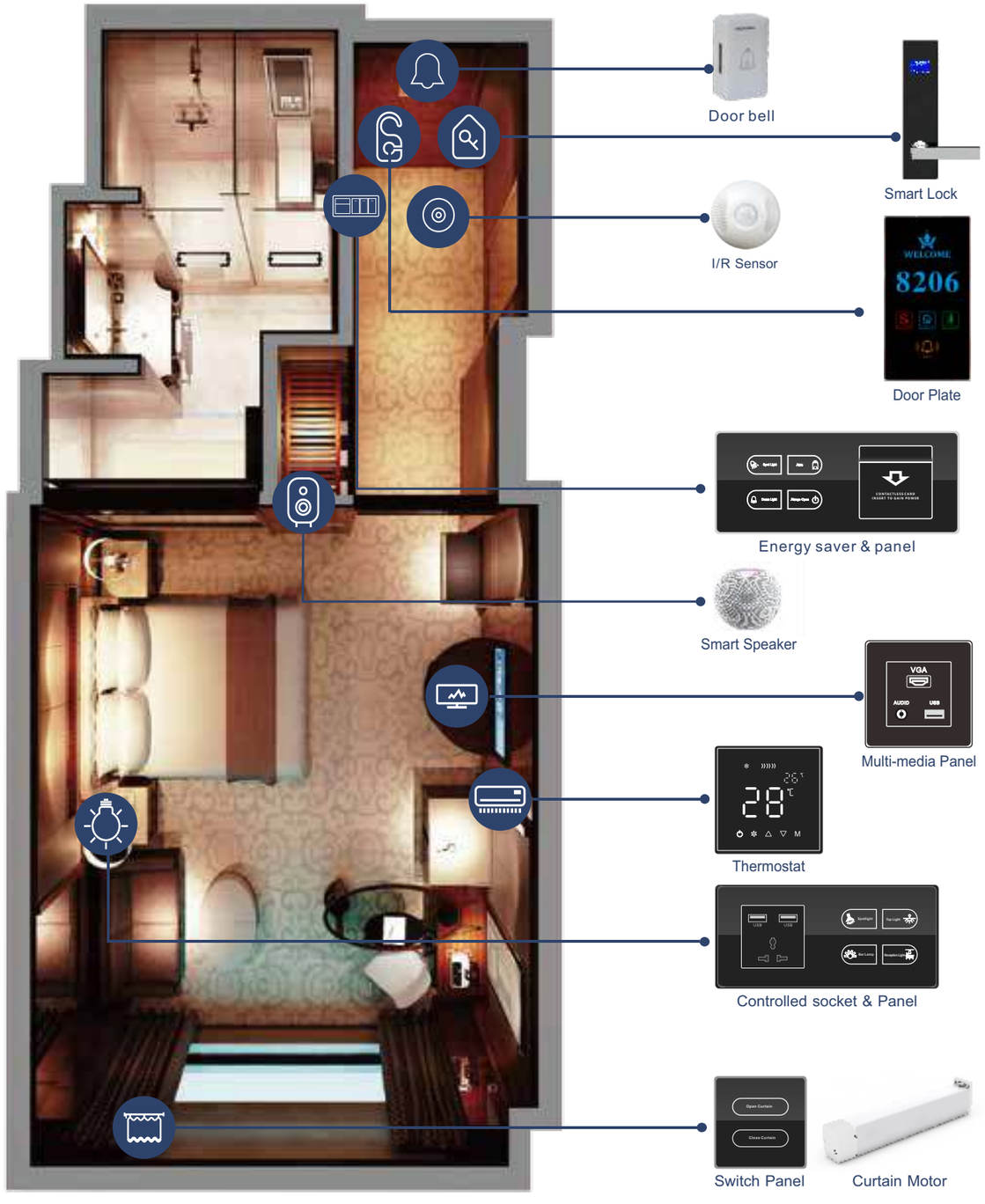

System Application Diagram

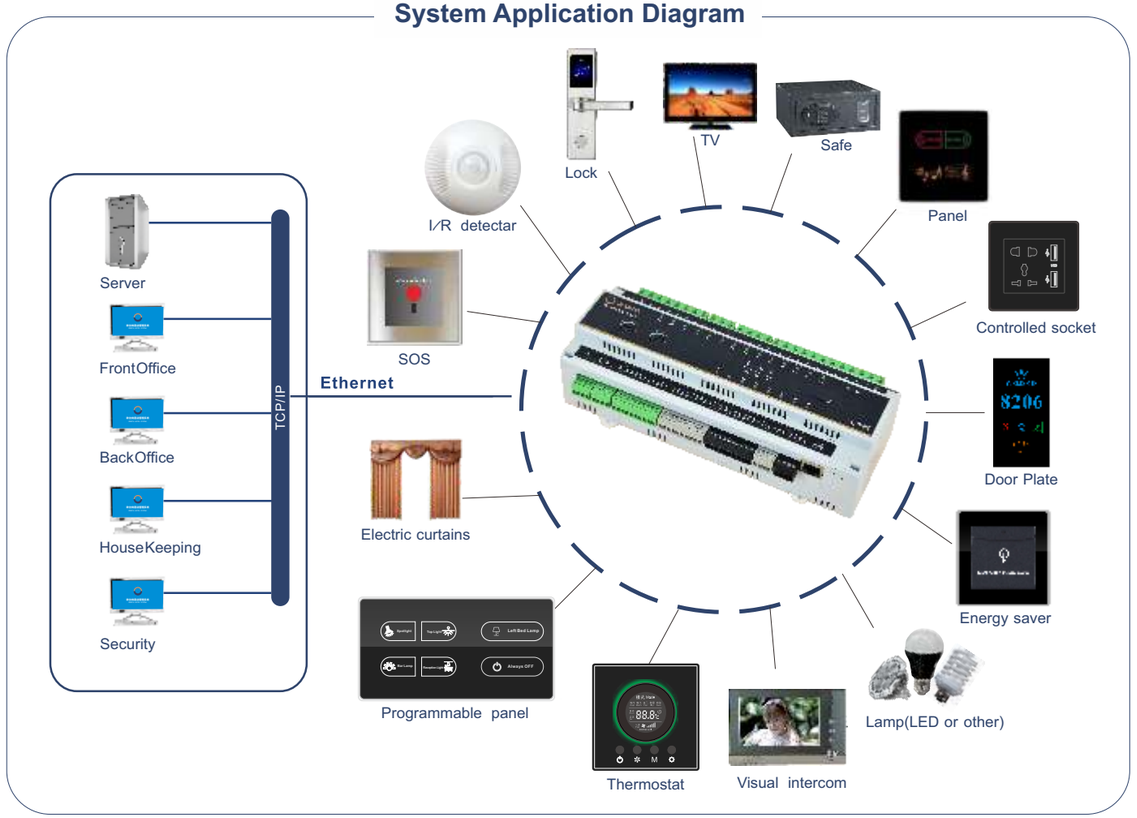

Guest Room Management System

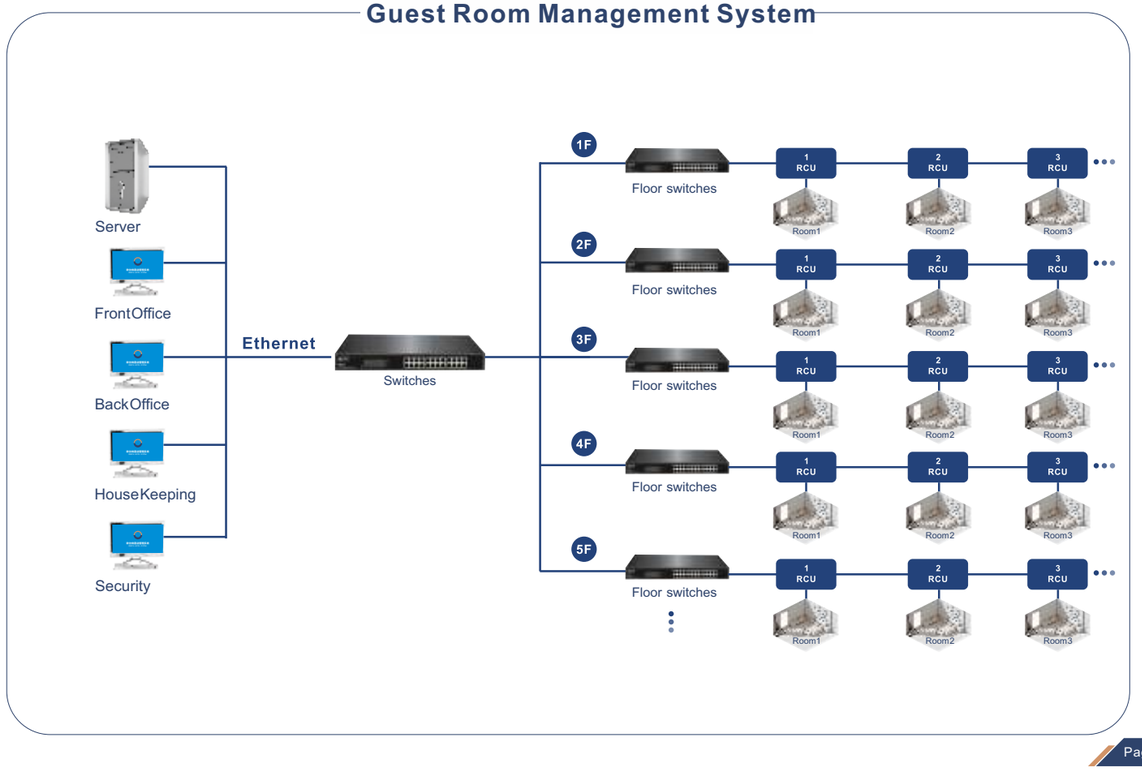

Hotel Room Safe

Features

- Steel material
- Events tracking function (optional)
- Spring loaded door
- Mounting holes at bottom and back with tamper-proof screws
- Timeout wrong code security feature
- Low battery warning

OBT-2043MB
Size(mm):W430*H200*D370

Model:OBT-2042MG
Size(mm):W420*H200*D370

Model:OBT-2042MJ
Size(mm):W420*H200*D370

Model:OBT-4135MG
Size(mm):W410*H150*D350

Model:OBT-4135MJ
Size(mm):W410*H150*D350

Hotel Minibar

Cooling Method: Absorption/Semi-conductor
Door Type: Black foam/Glass
Capacity: 30/40/60 Liters

Model	OBT-30	OBT-40	OBT-60
Cooling Method	Absorption	Absorption	Absorption
Storage Temperature (℃)	4-12	4-12	4-12
Input Power(W)	70	70	70
Validity Capacity(L)	30	40	60
Voltage(V)	AC220/110	AC220/110	AC220/110
Type of Controller	Digital	Digital	Digital
Type of Door Seal	Removable	Removable	Removable
Weight(kg)	16.5	18.5	21
Shape Size(W*D*H)mm	400*420*517	400*470*517	485*480*521

Model	TE-30	TE-40	TE-60
Cooling Method	Semi-conductor	Semi-conductor	Semi-conductor
Storage Temperature (℃)	5-18	5-18	5-18
Input Power(W)	65/75	65/75	65/75
Validity Capacity(L)	30	40	60
Voltage(V)	AC220/110	AC220/110	AC220/110
Type of Controller	Digital	Digital	Digital
Type of Door Seal	Removable	Removable	Removable
Net/Gross Weight(kg)	7.8/8.7	11.8/12.8	21.5/24
Shape Size(W*D*H)mm	380*385*466	430*410*501	490*500*580

Smart Hotel & Smart Home Panels

Frame material,frame color, icons, text , icon quantity etc. customizable

Glass Touch Panels

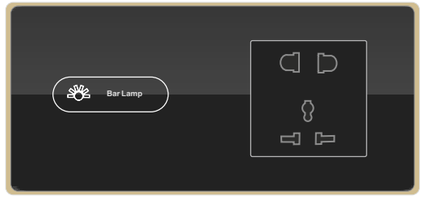

Metal Touch Panels

ABS Rocker Switch

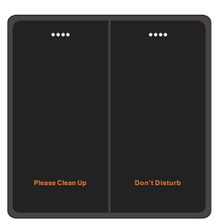

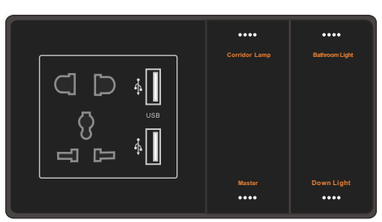

Smart Hotel & Smart Home Sockets

Frame material,frame color, icons, text , icon quantity etc. customizable

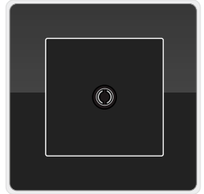

Energy Saving Switch

Door Plate

ESS-20

- Size:86mm*86mm
- Input: A/C 100v~150v or 180v~250v,40A
- Frequency:13.56MHz
- Power Control: insert guest's own room card or staff card to get power. Other room cards can not get power

ESS-40

- Size:86mm*86mm
- Input: A/C 100v~150v or 180v~250v,40A
- Frequency:13.56MHz
- Power Control: insert any 13.56Mhz card to get power

ESS-70

- Size:86mm*86mm
- Input: D/C 12v,120A, 3 phase out put with controller box.
- Frequency:13.56MHz
- Power Control: insert guest's own room card to get full power or staff card to get distributed power (programmable)

ESS-100

- Size:86mm*86mm
- Input: D/C 12v,120A, 1 phase out put with controller box
- Frequency:13.56MHz
- Power Control: insert guest's own room card to get full power (programmable)

ESS-41

- Size:86mm*86mm
- Input: A/C 100v~150v or 180v~250v,40A
- Frequency:13.56MHz
- Power Control: insert any 13.56Mhz card to get power

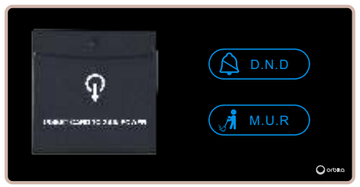

ESTD-01

- Size:86mm*172mm
- Input: A/C 100v~150v or 180v~250v,40A
- Frequency:13.56MHz
- With DND, MUR touch Panel
- Power Control: insert any 13.56Mhz card to get power

ORBITA Door Plate

- Personalized Hotel Logo
- Customizable design
- High grade display panel with backlit lighting

DS-258HR

DS-358HR

DS-202HS

DS-88HZ

DS-3410HS

DS-2412HS

DS-358

Touch Screen Panel

DSB-21S

TSS-02

TSS-42S

DS-40

TSS-40

Lift Reader

Lift reader

MFR-311

MFR-03

MFR-04

Intelligent Lift Controller

MFC-16

Features

- Guest card activates authorized floor/floors
- Staff card activates all floors
- Contactless, show card to illuminate authorized lift button, no need pressing
- Fire or emergency protection
- Safe and hygienic

Hotel Lock Accessories

S50 Mifare Card

Customized design:

- Hotel logo, name, picture
- Hotel contact & address
- Lock operation instruction
- Advertisement

MI-ECD20 Mifare Encoder

- Enhanced stainless steel body with enhanced anti-interference function
- USB port communication, driver free
- Encrypted algorithm with illegal cards identification function
- Double confidentiality with logic control

OBT-PP01 Wireless Portable Programmer

Helpful & Convenient

- Wireless
- Program locks
- Update clock
- Read & download opening records
- Open locks as master key

Dimension of External Panel:	L182*W68*H40mm
Material:	Black Plastic
Support type:	Mifare Smart Door Locks
Working Frequency:	13.56MHZ
Reading distance:	3-10cm
Working Temperature:	-20℃~60℃

Hotel Telephone

Customized hotel logo and text, One touch direct dialing buttons

OBT-1016

OBT-1005

OBT-1009

OBT-1009B

OBT-8901

OBT-8902

Bathroom Telephone

Wall mounted & waterproof

OBT-1011

OBT-1012

References

- 20,000 projects
- 120 countries
- All major Hotel Management Group

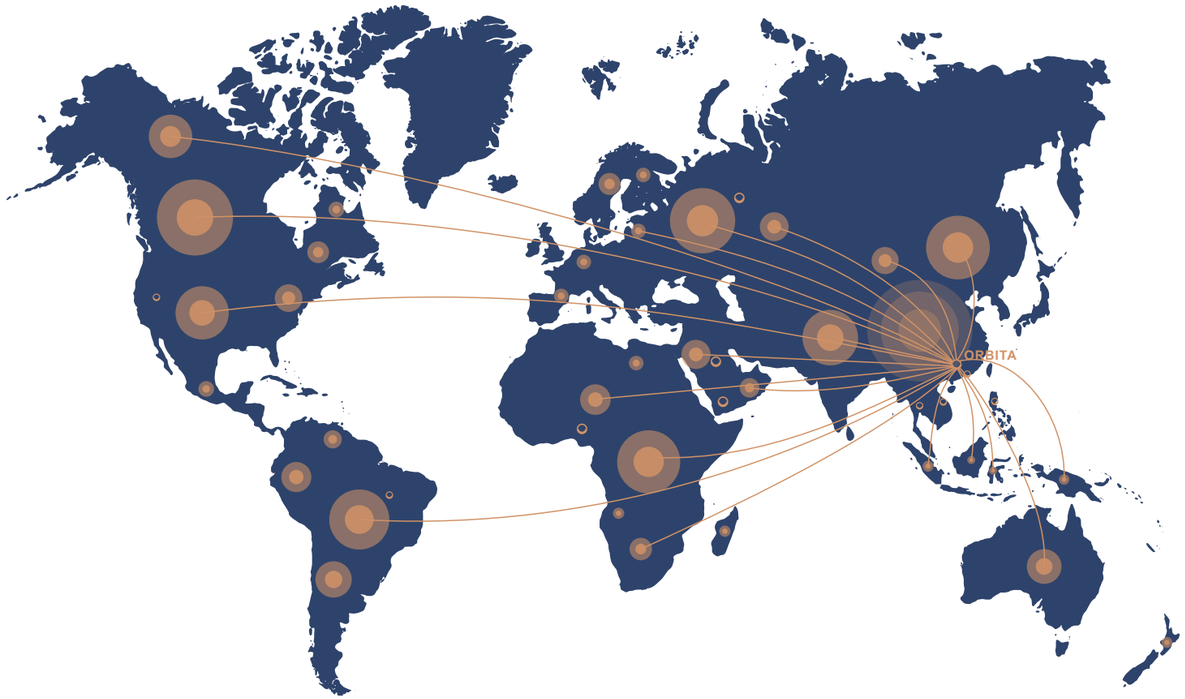

Marriott
ACCOR
IHG
WYNDHAM HOTEL GROUP
Hilton
HYATT GOLD PASSPORT
Kempinski
Barceló HOTELS & RESORTS
WARWICK
CHOICE
Best Western
NORDIC HOTEL
Jin Jiang International 锦江国际
华住 HUAZHU
MEHOOD
GSHM

Arena Hotel Nha Trang, Vietnam

Marriott Hotel, Kabul, Afghanistan

JW Marriott Hotel, Mexico City, Mexico

Saint Regis, Moscow, Russia

Sheraton Tamky Resort & Spa, Hoi An, Vietnam

Mövenpick Hotel, Kuwait

M Gallery, Mandalay, Myanmar

Rosa Bela Hotel, Puerto Ordaz, Venezuela

Apec Mandala Wyndham, Phu Yen, Vietnam

Shangri-La Hotel, Kathmandu, Nepal

Arjaan by Rotana, Dubai Media City, UAE

Inter Luxury Hotel, Addis Ababa, Ethiopia

Panari Hotel Nairobi, Kenya

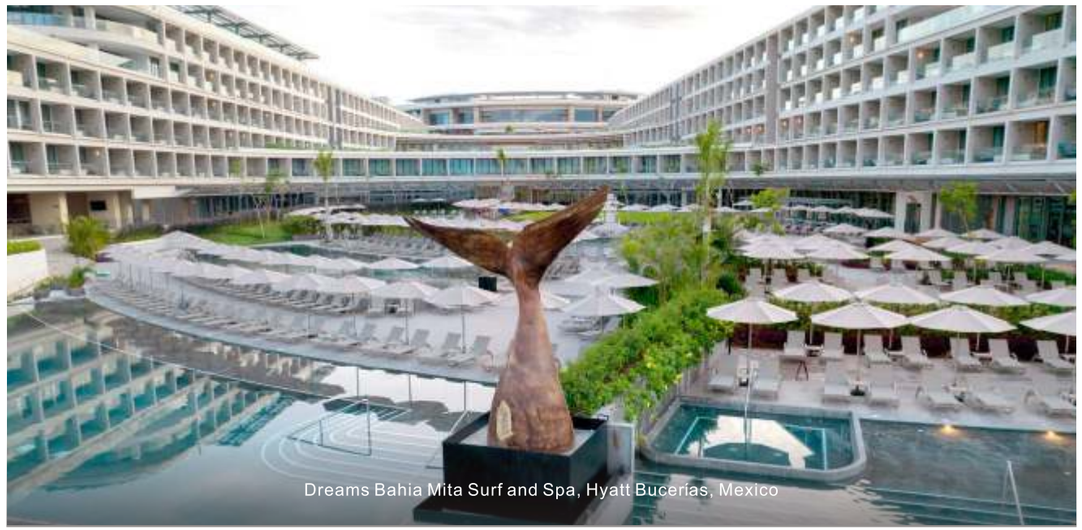
Dreams Bahia Mita Surf and Spa, Hyatt Bucerias, Mexico

La Quinta By Wyndham, Batumi, Georgia

Grand Plaza Hotel, Ljubljana, Slovenia

Grands Suites Hotel Residences & Spa, Gzira, Malta

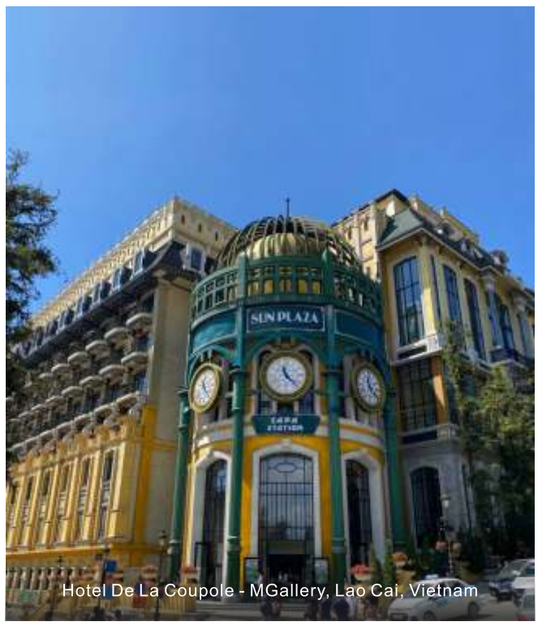

Hotel De La Coupole - MGallery, Lao Cai, Vietnam

Mercure Value Hotel, Riyadh, Saudi Arabia

Crowne Plaza, Manama, Bahrain

Isla Brown Corinthia, Palea EO Athinon Korinthou, Greece

Vuni Palace Hotel, Kyrenia, Cyprus

Holiday Inn & Suites Orlando, United States

Panorama Hotel, Manama, Bahrain

Intercontinental Riyadh, Saudi Arabia

Sunway Monash Residence, Selangor, Malaysia

Radisson Blu Hotel Lusaka, Zambia

Babylon Rotana, Baghdad, Iraq

Al Hamra Palace By Warwick, Riyadh, Saudi Arabia

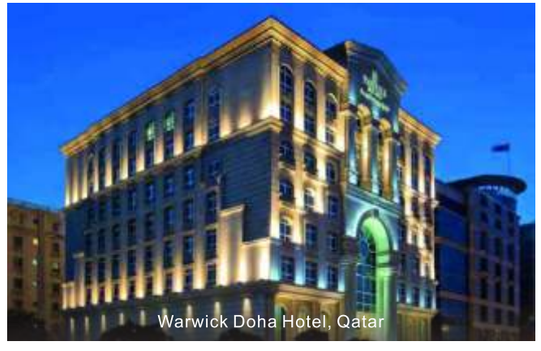
Warwick Doha Hotel, Qatar

Best Western Plus, Amedia Wien, Austria

The Crane Resort, St. Philip, Barbados

Radisson Blu Hotel, Larnaca, Cyprus

Best Western Elyon Colombo, Sri Lanka

Four Seasons Resort, Nayarit, Mexico

Delphin Imperial Hotel, Antalya, Turkey

Mövenpick Hotel And Casino Geneva, Switzerland

Kempinski Hotel, Nay Pyi Taw, Myanmar

Grand Regal Hotel, Davao, Philippines

Holiday Inn, Missouri, United States

TRYP by Wyndham, Miami Bay Harbor, United States

Holiday Inn & Suites, Georgia

Days Hotel & Suites Dakar, Senegal

Wyndham Grand Eretria, Greece

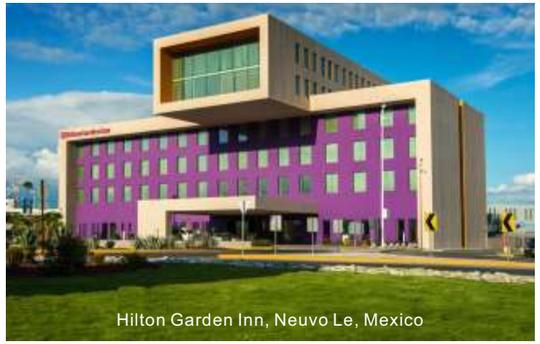
Hilton Garden Inn, Neuvo Le, Mexico

Wyndham Garden Manama, Bahrain

Gulf Suites Hotel, Amwaj, Bahrain

Ramada Hotel, Lahore, Pakistan

Park Plaza Westminster Bridge, London, UK

Select Hotel, Maastricht, Netherland

Hyatt Ziva Puerto Vallarta, Puerto Vallarta, Mexico

Asia

NO.	Country	Project (Hotel) Name	Star Rating
1	Korea	Plex Hotel	★★★★
2	Korea	Nox Hotel	★★★★
3	Korea	Junibin Boutique Hotel	★★★
4	Korea	Hotel Pass	★★★★
5	Malaysia	Wisma Perwira Angkatan Tentera Malaysia	★★★★★
6	Malaysia	Good Luck Inn	★★★
7	Malaysia	Jb Central Hotel	★★★
8	Malaysia	Apps Hotel	★★★★
9	Malaysia	Beta Apartment, Labuan	★★★
10	Malaysia	Vp Hotel	★★★★★
11	Malaysia	Kinta Riverfront Hotel & Suites	★★★★
12	Malaysia	Sunway University	★★★★★
13	Malaysia	Nilai Spring Resort	★★★★
14	Malaysia	Best Westhern KI	★★★★
15	Malaysia	Bayview Beach Hotel	★★★★★
16	Malaysia	Media Hotel	★★★★
17	Malaysia	Sai Villa Hotel	★★★★
18	Malaysia	Travelodge Hotel Asia @ Bukit Bintang	★★★★
19	Malaysia	W Hotel @ Masjid Jamek	★★
20	Malaysia	Seri Bayu Resort @ Sepang	★★★
21	Malaysia	Hype Motorsports Hotel @ Port Dickson	★★★
22	Malaysia	Grand INHOTEL (Kota Kinabalu)	★★★★
23	Malaysia	Best Western I-City Shah Alam	★★★★
24	Singapore	Hotel Waterfull	★★★★
25	Singapore	Recharge Residences	★★★
26	Myanmar	Su Tine San Royal Palace Hotel	★★★
27	Myanmar	Ibis Style Hotel	★★★★
28	Myanmar	Hotel Accord	★★★
29	Myanmar	Royal Taungyi Hotel	★★★
30	Myanmar	Senctum Inle Resort	★★★★
31	Myanmar	Eastern Hotel	★★★★
32	Myanmar	Azura Beach Resort	★★★★
33	Myanmar	Hotel H Valley	★★★
34	Myanmar	My Dream Hotel	★★★
35	Myanmar	Tun Yadanar Hotel	★★★★
36	Myanmar	Belle Resort	★★★★
37	Myanmar	Hotel V.a.n	★★★★
38	Myanmar	Pyay Garden Residence	★★★★
39	Myanmar	Victoria Palace Hotel	★★★
40	Myanmar	Hotel M	★★★
41	Myanmar	Kempinski Hotel Nay Pyi Taw	★★★★★
42	Myanmar	Ruby Garden Hotel	★★★
43	Myanmar	Family Treasure Inn	★★★
44	Myanmar	Ibis Styles Yangon Stadium	★★★★★
45	Myanmar	Hlaine Tet Yangon	★★★★
46	Myanmar	Mandalay Hill Resort Hotel	★★★★
47	Indonesia	Gumaya Tower Hotel	★★★★
48	Indonesia	Love F Hotel Card	★★★★
49	Indonesia	Plaza Crystalthe Crystal On Thebay	★★★
50	Indonesia	Cultural Royale	★★★
51	Indonesia	The Sun Hotel Didoarjo	★★★★
52	Indonesia	Twin Plaza Hotel	★★★★
53	Indonesia	Hotel Wisata Group Indonesia	★★★★
54	Indonesia	Hotel Satelit Surabaya	★★★★
55	Indonesia	Marina Hotel	★★★
56	Indonesia	Suarga Hotel	★★★
57	Indonesia	Grand Central Premier	★★★★
58	Indonesia	Rayz Hotel	★★★
59	Cambodia	V Phnom Penh Hotel	★★★
60	Cambodia	Sokhalay Angkor Villa Resorts	★★★★★
61	Cambodia	Monsoon	★★★
62	Cambodia	Angkor Howard Hotel	★★★★★
63	Cambodia	Prince D' Angkor Hotel & Spa	★★★★
64	Cambodia	Star Vegas Casino&Casino&Hotel	★★★★
65	Cambodia	Angkor Miracle Resort	★★★★
66	Cambodia	Prince D' Angkor Resort	★★★★
67	Cambodia	Sunshine Bay Resort	★★★★
68	Cambodia	Palm Palace Resort	★★★★
69	Cambodia	Riva Hotel, Joli Boutique	★★★★
70	Cambodia	Lebiz Hotel	★★★
71	Cambodia	Paris Hotel	★★★
72	Cambodia	Ohana Hotel	★★★
73	Cambodia	Plantation Hotel	★★★
74	Cambodia	Angkor Village Hotel	★★★
75	Thailand	Grand Miracle Hotel	★★★★
76	Thailand	Best Westhern Patong	★★★★
77	Thailand	Grand Bella	★★★★
78	Thailand	The Sun Exclusive Hotel	★★★★
79	Thailand	Bann Lai Mai Patong	★★★★
80	Thailand	Ibis Style Aonang	★★★
81	Thailand	Avion Apart Hotel Airport	★★★★
82	Thailand	Grand Plaza Patayya	★★★
83	Thailand	Novotel Bangna	★★★
84	Thailand	The Grass Serviced Suites, South Pattaya	★★★★
85	Thailand	X2 River Kwai Resort Kanchanaburi	★★★★
86	Thailand	Fyn Hotel	★★★
87	Thailand	Volve Hotel	★★★
88	Thailand	Silver Sand And Suites Krabi	★★★
89	Thailand	Hop Inn all over Thailand	★★★★★
90	India	Leo Meridian Resort	★★★
91	India	Days Inn Deccan Plaza	★★★★
92	India	Best Western Ramachandra	★★★★★
93	India	Royal Orchid Hotel	★★★
94	India	The Fern Residency Hotel	★★★★
95	India	Sun & Sand	★★★★★
96	India	Ambassdor Pallava	★★★★
97	India	Majestic Park Plaza	★★★★
98	India	Ambassdor Ajanta	★★★★
99	India	Saya Grand Club & Resort Hotel	★★★★★
100	Pakistan	Ramada Hotel	★★★★★
101	Pakistan	Hill View Hotel	★★★★
102	Pakistan	Luxus Grand Hotel	★★★★
103	Pakistan	Ramada Hotel	★★★★
104	Pakistan	Islamabad Hotel	★★★★
105	Pakistan	Avari Hotels and Resorts	★★★★
106	Pakistan	Hotel One by Pearl- Continental	★★★
107	Pakistan	Sheltons Rezidor Islamabad	★★★★
108	Laos	Raysomboun Boutique Hotel	★★★
109	Maldives	Seashore Beach Inn	★★★
110	Maldives	Varu By Atmosphere	★★★★
111	Maldives	Cape Diem Beach Resort& Spa	★★★★
112	Maldives	Kanni Palm	★★★★
113	Maldives	King Hotel Astana	★★★★
114	Kazakhstan	Crystal Plaza Resort	★★★★
115	Kazakhstan	Oasis-1 Ltd	★★★★

Asia

NO.	Country	Project (Hotel) Name	Star Rating
116	kazakhstan	G Empire	★★★★
117	Vietnam	Elios Hotel	★★★★
118	Vietnam	Asia Paradise Hotel	★★★★
119	Vietnam	Hanoi Elegence Hotel	★★★★
120	Vietnam	Duc Long Hotel	★★★
121	Vietnam	Luxury Hotel	★★★
122	Vietnam	Muong Thanh DaNang Hotel	★★★★
123	Vietnam	Galina Hotel Nha Trang	★★★
124	Vietnam	Salinda Premium Resort And Spa	★★★★★
125	Vietnam	Asia Paradise Hotel	★★★★★
126	Vietnam	Petro Hotel	★★★★★
127	Vietnam	VDB Nha Trang Hotel	★★★★
128	Vietnam	Hanoi Imperial Hotel	★★★★
129	Vietnam	Gold Hotel	★★★★
130	Vietnam	Smile Hotel	★★★★
131	Vietnam	Crown Hotel	★★★
132	Vietnam	Thanh Binh 02 Hotel	★★★
133	Vietnam	Barcelona Hotel	★★★
134	Vietnam	Anise Hotel Ha Noi	★★★
135	Vietnam	Hanoi Manor Hotel	★★★
136	Vietnam	The Kingston Hotel	★★★
137	Vietnam	DucLong Dung Quat HoTel	★★★
138	Vietnam	Eden Resrot	★★★
139	Vietnam	Grand Silverland Hotel	★★★
140	Vietnam	Bloom I Hotel	★★★
141	Vietnam	Bach Viet Nha Trang Hotel	★★★
142	Bangladesh	Golden Tulip	★★★
143	Bangladesh	Momo Inn	★★★★
144	Bangladesh	Dusai Resort & Spa	★★★
145	Bangladesh	Royal Beach Resort	★★★
146	Bangladesh	Paragon Hotel&resort	★★★
147	Bangladesh	Oasis World Beach Resort	★★★★
148	Philippines	The Orchard Cebu Hotel & Suites	★★★★
149	Philippines	Metro Vigan Regency Hotel	★★★
150	Philippines	Wellcome Hotel	★★★
151	Philippines	O Hotel Bacolod City Philippiness	★★★★
152	Philippines	First Federated Properties Inc.	★★★
153	Philippines	Sumo Asia Hotel	★★★★
154	Philippines	Crown Regency Hotel & Towers	★★★★★
155	Philippines	Crown Regency Prince Resort	★★★★★
156	Philippines	Bacolod Business Inn	★★★
157	Philippines	Luxury Suites Hotel	★★★
158	Philippines	Crown Regency Hotel&towers In Cebu	★★★★
159	Philippines	Seven Seas Waterpark & Resort	★★★★
160	Philippines	Noble Hotel Cebu	★★★★
161	Philippines	Grand Regal Hotel	★★★★
162	Sri Lanka	Fairway City Hotel	★★★★
163	Sri Lanka	Best Western Elyon Colombo	★★★★
164	Nepal	Shangrilla Village Resort	★★★★
165	Nepal	Gokarna Forest Resort	★★★★★
166	Nepal	Hotel Crown Imperial	★★★
167	Nepal	Siddhartha International	★★★★★
168	Nepal	Siddhartha view Hotel	★★★
169	Nepal	Goodwill Hotel	★★★
170	Nepal	Indreni Suit Hotel	★★★
171	Nepal	Patihani Resort	★★★★
172	Nepal	Royal Penguine Boutique Hotel	★★★
173	Nepal	Landmark Hotel	★★★
174	Nepal	Kuti Resort	★★★
175	Nepal	Hotel Mount View	★★★
176	Nepal	Le Himalaya	★★★
177	Nepal	Park Safari	★★★
178	Nepal	Bar peepal Resort	★★★★
179	Uzbekistan	Navrus Hotel	★★★★
180	Uzbekistan	Regal Stay Hotel	★★★
181	Uzbekistan	Gloria Hotel	★★★★
182	Uzbekistan	Sofiya Hotel	★★★
183	Uzbekistan	Sato Hotel	★★★
184	Uzbekistan	Qushbegi Plaza Hotel	★★★
185	Uzbekistan	The Royal Mezbon Hotel	★★★★
186	Uzbekistan	Asmald Palace Hotel	★★★
187	Uzbekistan	Ark Billur Hotel	★★★
188	Uzbekistan	Sayyoh Hotel	★★★
189	Lebanon	Almurjan palace hotel	★★★★
190	Afghanistan	Marriott Hotel	★★★★★
191	Israel	ramotarazim Hotel	★★★★
192	Armenia	Ararat Resort	★★★★★
193	Armenia	Annie Ajemian Resort, Llc	★★★
194	Armenia	Golden Palace Hotel	★★★★
195	Armenia	Ani Grand Hotel	★★★★
196	Georgia	Royal Garden Hotel	★★★★
197	Georgia	Sea Home Batumi	★★★★
198	Georgia	Rooms Hotel Kokhta	★★★★
199	Georgia	Bellevue Residence	★★★★
200	Georgia	La Quinta Batumi by Wyndham	★★★★
201	Georgia	Hotel Oasis	★★★★
202	Georgia	Seaside Hotel	★★★★★
203	Georgia	Tskaltubo Plaza Hotel	★★★★
204	Georgia	Olosseum Hotel	★★★
205	Georgia	Oasis Hotel	★★★
206	Georgia	Jvk Hotel	★★★★

Europe

NO.	Country	Project (Hotel) Name	Star Rating
1	UK	The Palace Resort	★★★★
2	UK	Courthouse Hotel	★★★
3	UK	The Cardiff Hotel	★★★★
4	UK	Plaza London Hotel	★★★★★
5	UK	Paramount Liverpool	★★★★
6	UK	Auadrant Liverpool	★★★★
7	UK	Plato House Liverpool	★★★★
8	UK	Spectrum Leeds	★★★★
9	UK	The Ruskin Hote	★★★★
10	UK	Mstay	★★★★
11	UK	Cardiff Hotel	★★★★
12	UK	The Lawton	★★★★
13	UK	He Beechfield	★★★★
14	UK	Nox hotels	★★★★
15	UK	Beachfield	★★★
16	UK	Latwon	★★★
17	UK	Plaza London Hotel	★★★★
18	Germany	Hotel Maxis	★★★
19	Germany	AapHotel	★★★
20	Germany	Seehotel Litz	★★★★
21	Germany	Nordic Hotel Group	★★★

Europe

NO.	Country	Project (Hotel) Name	Star Rating
22	France	Select Hotel	★★★★
23	France	Zenia Hotel & Spa	★★★
24	France	Norasy Group Hotel	★★★
25	Slovakia	Hotel Sun	★★★
26	Macedonia	City House Bitola	★★★
27	Lithuania	Corner Hotel	★★★
28	Greece	Argiro Village Hotel	★★★
29	Greece	Macedonia Hotel	★★★★★
30	Greece	Porto Myrina Palace	★★★
31	Greece	Ibiscus Hotel	★★★★★
32	Greece	Tselikas Hotel	★★★★
33	Greece	Hotel Monarch	★★★
34	Greece	Dave Red Hotel	★★★
35	Greece	Niko Seaside Mgallery	★★★★
36	Greece	Wyndham Grand Eretria	★★★★★
37	Greece	Brown Acropol	★★★
38	Greece	Brown Corinthians	★★★★
39	Greece	Villa Ermou	★★★★
40	Greece	Brown Dave by sea	★★★★★
41	Spain	Apartamentos Soly Vera	★★★
42	Spain	Hyb Eurocalas	★★★
43	Spain	Bacelo Group Hotel	★★★★★
44	Spain	Hotel Congreso	★★★★
45	Netherland	Select Hotel	★★★★★
46	Netherland	Chasse Hotel	★★★★
47	Netherland	Radission Blue	★★★★★
48	Hungary	Balaker'99 Zrt	★★★
49	Romania	Hotel Criss	★★★★
50	Malta	Luna Holiday Complex	★★★★★
51	Iceland	Foss Hotel	★★★★
52	Iceland	Grand Hotel Reykjavik	★★★★
53	Sweden	First Hotel Vaterus	★★★★★
54	Sweden	Pedersen´s Hotell AB	★★★★
55	Poland	Poland Olimpic Park	★★★
56	Poland	Hotel Best Inn	★★★
57	Croatia	Terme ćatež	★★★★
58	Croatia	Bluesun hotels	★★★★
59	Ireland	Talbot Hotel	★★★★
60	Bulgaria	Havana Hotel Casino & SPA	★★★★
61	Austria	Best Western Plus	★★★
62	Serbia	Zepter Hotels	★★★★
63	Serbia	Sunce Hotel	★★★★
64	Cyprus	Kantara Palace Hotel	★★★★
65	Cyprus	Oscar Resort Hotel	★★★★
66	Cyprus	Bellapais Monastery Village	★★★★
67	Cyprus	Vuni Palace Hotel	★★★★★
68	Cyprus	Stavrolia Gardon Hotels	★★★★
69	Cyprus	Sveltos Hotel	★★★
70	Cyprus	Elysso Hotel	★★
71	Cyprus	Oscar Resort Hotel	★★★
72	Cyprus	A&a Constantinou Bros Ltd	★★★★★
73	Ukraine	Hotel Diligence	★★★
74	Ukraine	Reikartz Hotel & Resorts	★★★★
75	Ukraine	Hotel Monarch	★★★★★
76	Russia	Saint Regis Hotel	★★★★★
77	Russia	Hotel Limanskiy	★★★
78	Russia	Spa Hotel	★★★
79	Russia	Kempinski Hotel	★★★★★
80	Russia	Rodnik (city Rostov-on-don)	★★★★
81	Russia	Villadzhio (city Moscow)	★★★
82	Russia	Dolphin (city Sochi)	★★★★★
83	Russia	Primorskaya (city Sochi)	★★★
84	Russia	Bellagio (city Rostov-on-don)	★★★
85	Russia	Grozny Palace (City Grozny)	★★★
86	Russia	Vidnaya (City Mahachkala)	★★★★
87	Russia	D`muazel (Goryachiy Kluch)	★★★★
88	Russia	Laruzniy Bereg (Tumen)	★★★★
89	Russia	Smile Hotel (Nalchik)	★★★★
90	Russia	Oktyabrsky (Arhangelsk)	★★★
91	Russia	Avdonili (Anapa)	★★★
92	Russia	Long Beach (Anapa)	★★★
93	Russia	Gold Beach (Anapa)	★★★
94	Russia	Snow Queen (City Dombay)	★★★★
95	Russia	Ideal (city - Siktivkar)	★★★
96	Russia	Cityhotel (Novosibirsk)	★★★
97	Russia	The Time Hotel (Pityah)	★★★
98	Russia	Troya (Gelendzhik)	★★★
99	Russia	Arthotel (Essentuki)	★★★
100	Russia	Gazprom Hotel (Moscow)	★★★
101	Russia	Sicilia (Moscow)	★★★
102	Russia	Berendeevka (Kostroma)	★★★
103	Russia	Kempenski Red Square Russia	★★★★★
104	Slovenia	Hotel Slon	★★★
105	Malta	Luna Holiday Complex	★★★★
106	Malta	Alexandra Hotel	★★★★
107	Malta	Pergola Club Hotel & Spa	★★★★
108	Malta	Grands Hotel	★★★★
109	Turkey	Hotel Bosphorus	★★★★
110	Turkey	Latifoglu Hotel	★★★
111	Albania	Oricon Coast Luxury Resort	★★★★
112	Albania	Hotel Devi	★★★

Africa

NO.	Country	Project (Hotel) Name	Star Rating
1	Kenya	Kenya Bay Beach Hotel Ltd	★★★
2	Kenya	Landstar Hotel	★★★★
3	Kenya	Amani Tiwi Beach Resort	★★★★★
4	Kenya	Panari Hotels	★★★★★
5	Kenya	Ocean Village Club	★★★★
6	Kenya	Zehneria Nairobi	★★★★★
7	Kenya	Sunlodges Kenya Ltd.	★★★★
8	Kenya	Divine Homes Resorts	★★★★
9	Kenya	Al Jamea Tus Saifiyah	University
10	Zambia	Radisson Blu Hotel	★★★★
11	Sudan	Quality Hotel	★★★
12	South Africa	Al Hamra Boutique Hotel	★★★★
13	South Africa	Premier Hotels&resorts	★★★
14	Cameroon	Yahoot Hotel	★★★
15	Cameroon	Hotel Makepe Palace	★★★★
16	Cameroon	Tropical Hotel	★★★
17	Cameroon	Clamentis Hotel	★★★
18	Cameroon	Adamaoua Hotel Plus	★★★
19	Cameroon	Mbayaville Hotel	★★★
20	Cameroon	Sahel Hotel	★★★
21	Albania	Hotel Devi	★★★
22	Uganda	Hilton-hotel-Kampala	★★★★★

23	Ethiopia	Neger Bonger	★★★★★
24	Ethiopia	Intercontinental Hotel	★★★★
25	Egypt	Sphinx Resort	★★★★
26	Egypt	Aswan Hotel	★★★★
27	Egypt	King Tut Resort	★★★
28	Egypt	Nile Cruise	★★★★
29	Egypt	Makadi Grand Resort- Pharoanic Hotel	★★★
30	Egypt	El Salam	★★★
31	Egypt	Dreams Beach	★★★
32	Egypt	Tronics & Marassi Hub	★★★★
33	Nigeria	Midas Hotel	★★★
34	Nigeria	VISA Karena Hotel	★★★
35	Nigeria	Penyu Hotel&Resorts	★★★
36	Nigeria	Benidon lounge	★★★★
37	Nigeria	D'Andora Hotel	★★★★
38	Nigeria	Best Western Plus Elomaz Hotel	★★★
39	Nigeria	Lake Chad Palace Hotel	★★★
40	Nigeria	Monty Suites & Golf 4 star	★★★★
41	Nigeria	Racoo Classic Hotel & Suites	★★★
42	Nigeria	Filagues Hotel and Suites	★★★★
43	Nigeria	Ambience Hotel and Resorts Ltd	★★★★
44	Nigeria	Wellborn Hotel	★★★★★
45	Nigeria	Fountainhead Resorts	★★★★★
46	Nigeria	Bonny Delight Guesthouse	★★★
47	Tanzania	Oceanic Bay Hotel & Resort	★★★★★
48	Tanzania	Ocean Paradise Resort Zanzibar	★★★★★
49	Congo	Kampi Ya Boma	★★★★★
50	Libya	Diplomatic Hotel Tripoli-libya	★★★★★
51	Senegal	Days Inn	★★★★
52	Tunis	Fiesta Beach	★★★★
53	Tunis	Marhbe yati beach	★★★★★
54	Angola	Hotel Diamante Grupo Endiama	★★★★★

North America

NO.	Country	Project (Hotel) Name	Star Rating
1	Canada	Forest Golf Club and Inn	★★★★
2	Canada	The Wickaninnish Inn	★★★★
3	USA	La Quinta Hotel	★★★★
4	USA	Fashionhaus Hotel	★★★★
5	USA	SG Resorts International	★★★★★
6	USA	Sheldon Hotel	★★★
7	USA	Veracity Development	★★★
8	USA	New York Studio Factory	★★★
9	USA	Legamia Inn	★★★
10	USA	Para Hotels	★★★★
11	USA	Herdmanston Lodge	★★★
12	USA	Ajsunct Faculty	★★★
13	USA	Lyndy's Motel	★★★
14	USA	Best Western Inn	★★★★
15	USA	Toubana On The Beach	★★★
16	USA	Baymount Inn&suite	★★★
17	USA	Studio6	★★★
18	USA	Ziad Apartment	★★★
19	USA	Grand Hotel Orlando	★★★★★
20	USA	Cape Crossing	★★★★
21	USA	Tryp Miami Bay Harbor	★★★★
22	Mexico	Grand Velas	★★★★★
23	Mexico	Fouetm Hotel	★★★★★
24	Mexico	Hyb Eurocalas	★★★★★
25	Mexico	Estancia Inn	★★★

26	Mexico	Hilton	★★★★★
27	Mexico	Dreams Acapulco Resort & Spa	★★★★★
28	Mexico	Hotel Voyage	★★★★
29	Mexico	Roygent Parks	★★★★★
30	Mexico	Dreams Vista Cancun	★★★★★
31	Mexico	Mayan Monkey Cabo	★★★★
32	Mexico	Mayan Monkey Cancun	★★★★
33	Mexico	Acopinalco Inn	★★★★
34	Mexico	Hotel Autentico	★★★★★
35	Mexico	Krystal	★★★★★
36	Mexico	Staybridge	★★★★★
37	Mexico	Sandos	★★★★★
38	Mexico	Mision Hotel	★★★★
39	Mexico	Sandos Playacar	★★★★★
40	Mexico	Safi	★★★★★
41	Mexico	Grupo Brsisas	★★★★★
42	Mexico	Fibra Inn	★★★★★
43	Mexico	Grand Velas Vallarta	★★★★★
44	Mexico	Crown Paradise	★★★★
45	Mexico	Gamma Hoteles	★★★★★
46	Mexico	Hotel Sawari	★★★★★
47	Mexico	Four Seasons	★★★★★
48	Mexico	Now Jade	★★★★★
49	Mexico	Sunscape	★★★★★
50	Mexico	Hyatt Ziva Puerto Vallarta	★★★★★
51	Mexico	Neocom	★★★★
52	Mexico	Grand Hotel Acapulco	★★★★★
53	Mexico	Hotel Estudio	★★★★★
54	Mexico	Marriot	★★★★
55	Mexico	Hotel Batab Cancun	★★★★

South America

NO.	Country	Project (Hotel) Name	Star Rating
1	Ecuador	Hotel Finlandia	★★★
2	Ecuador	Hillary Nature Resort&Spa	★★★★★
3	Costa Rica	Grupo Stella	★★★★
4	Venezuela	Hotel Las Gaviotas	★★★★
5	Venezuela	Novenca Hotel	★★★★
6	Venezuela	Hilton Hotel in the city of Puerto Ordaz	★★★★★
7	Venezuela	Hotel Jadin	★★★★
8	Venezuela	Hotel Paseo Las Mercedes	★★★★★
9	Venezuela	Humboldt Hotel	★★★
10	Paraguay	Marambaia Hotel	★★★★
11	Brazil	Ramada Hotel	★★★★
12	Argentina	Gold Point	★★★★
13	Argentina	Dario Hotel	★★★
14	Chile	Panamericana Hoteles	★★★
15	Chile	Inmobiliaria E Inversiones G	★★★★
16	Colombia	Hotel Centro De Convencions	★★★
17	Colombia	Hotel De La Opera	★★★★
18	Colombia	Grupo Hotel	★★★★
19	Colombia	Hotel Olimpo Resort	★★★
20	Colombia	Hotel Roseliere Hotel & Business	★★★★
21	Colombia	Holiday Inn	★★★★★
22	Colombia	Dorado Plaza	★★★★★
23	Colombia	Wyndham Garden Hotel	★★★★★
24	Peru	Bb Hotel	★★★
25	Peru	Sonia Hotel	★★★
26	Haiti	Villa Elegance Hotel	★★★★
27	Bolivia	Cesar's Plaza Hotel	★★★★

28	Honduras	Copantle Hotek & Suites	★★★★
29	Barbados	Almond Casuarina Beach Resort	★★★★

Oceania

NO.	Country	Project (Hotel) Name	Star Rating
1	New Zealand	The Old Countryhouse	★★★
2	Australia	Kununurra Lakeside Resort	★★★★
3	Australia	Marriot Sysdney	★★★★★
4	Australia	Duck Inn	★★★
5	Australia	Kangaroo House	★★★
6	Australia	Best Western Sheridan	★★★★
7	Australia	Rydged Adelaide	★★★★
8	Australia	Western Heritage Motor Inn	★★★
9	Australia	Hotel Telephones	★★★
10	Australia	Adara Hotel Apartment	★★★
11	Australia	Guest Richmond	★★★
12	Australia	Golden Leaf Motor Inn	★★★
13	Papua New Guinea	Madang Resort Hotel	★★★
14	Papua New Guinea	Phils Motel	★★★
15	Papua New Guinea	Madang Resort Hotel	★★★★
16	Fiji	Al-Minhaj Service Apartments	★★★

Middle East

NO.	Country	Project (Hotel) Name	Star Rating
1	U.A.E	Golden Beach Resort Qeshm Island	★★★
2	U.A.E	Arabian Suite	★★★★
3	U.A.E	Arjaan Hotel By Ronata	★★★★★
4	U.A.E	Corp Hotel	★★★★
5	U.A.E	Mirage Hotel	★★★★★
6	U.A.E	Dubai marine beach resort and spa	★★★★
7	U.A.E	Saray Deluxe Apartments Abu Dhabi	★★★★
8	Bahrain	Panaroma Hotel	★★★★★
9	Bahrain	Gulf Residence Amwaj	★★★★
10	Bahrain	Al Mass tower	★★★★
11	Bahrain	Mishal Motel	★★★★
12	Bahrain	Crown Plaza Bahrain	★★★★★
13	Bahrain	Ramada Hotel	★★★★
14	Bahrain	Crowne Plaza Manama (Bahrain)	★★★★★
15	Bahrain	Gulf Suites Hotel - Amwaj	★★★★
16	Bahrain	Bahrain Airport Hotel operated by Gulf Hotels Group	★★★★
17	Bahrain	Asdal Gulf Inn Boutique Hotel Seef	★★★★
18	Bahrain	Gulf Executive Residence Juffair	★★★★
19	Bahrain	Paronama Hotel Bahrain	★★★★
20	Bahrain	Wyndham Garden Manama	★★★★
21	Bahrain	Ramada Hotel by Wyndham	★★★★
22	Bahrain	Park Regis Lotus Hotel	★★★★
23	Bahrain	Meshal Hotel	★★★★
24	Bahrain	Hayat Palace Hotel	★★★
25	Bahrain	Catamaran Towers	★★★★
26	Bahrain	Veve Tower	★★★★
27	Bahrain	Rozana Hotel	★★★★
28	Bahrain	Nablus Apartment	★★★★
29	Bahrain	Al Sabah Apartment	★★★★★
30	Qatar	Warwick Hotel	★★★★★
31	Qatar	Al Muntazah Plaza	★★★★
32	Qatar	Citivilla	★★★★

33	Qatar	City Gate Hotel	★★★★★
34	Qatar	Al Muntazah Plaza Hotel	★★★
35	Saudi Arabia	"ITCC-Data Center,Riyadh,KSA"	★★★★
36	Saudi Arabia	Habitat Hotel	★★★★★
37	Saudi Arabia	Mercure Value Hotel	★★★★
38	Saudi Arabia	Hotel Mirage Taiba	★★★★
39	Saudi Arabia	Copthorne Hotel Riyadh by Millennium	★★★★
40	Saudi Arabia	Fortune Furniture	★★★★★
41	Saudi Arabia	Rosalina Hotel & Suite	★★★★
42	Saudi Arabia	Tulip Inn Dammam	★★★★
43	Saudi Arabia	Al-Safwa Hotel	★★★★
44	Saudi Arabia	Sunrise Hotel	★★★★★
45	Saudi Arabia	Al Ahsa College of Technology	College
46	Saudi Arabia	Cantonal Hotel By Warwick	★★★★★
47	Saudi Arabia	Asala Residence	Apartment
48	Saudi Arabia	Alramz Apartments	Apartment
49	Saudi Arabia	Refal Apartments	Apartment
50	Saudi Arabia	Al Majdiah Residence	Apartment
51	Iraq	Hoda Al-Wali Hotel	★★★★
52	Iraq	Zryan Plaza Hotel	★★★★
53	Iraq	Canyon Hotel	★★★★
54	Iraq	N hotel	★★★★★
55	Iraq	Erbil International Hotel	★★★★★
56	Iraq	Hawler Plaza Hotel	★★★★
57	Iraq	Erbil International Hotel	★★★★★
58	Iraq	Babylon Rotana	★★★★★
59	Iraq	Jar Alamer Hotel	★★★
60	Iraq	Borj Al-murad Hotel	★★★★
61	Iraq	Babylon Rotana, Baghdad	★★★★★
62	Iraq	Babylon Rotana Hotel	★★★★★
63	Iraq	Al-Harith Tower Hotel	★★★★
64	Oman	Radisson Blu Hotel	★★★★
65	Oman	Centara Muscat Hotel	★★★★
66	Oman	Pioneer Hotel Apartments	★★★★
67	Oman	Eastin Residences Muscat	★★★★
68	Oman	Al Murooj Grand Hotel	★★★
69	Oman	Muscat Dunes Hotel	★★★
70	Oman	Sama Suhar Hotel Apartments	★★★
71	Oman	Al Hail Waves Hotel Managed by Centara	★★★
72	Oman	Sama Muscat Hotel	★★★
73	Syria	City of Jasmine Damascus	★★★★